Vizzyalarm™ 1-Zone Alarm

WiFi | Rated Type 1, Indoor Alarm Panel

MODEL: VZW-02, ALARM PANEL ONLY

Alderon™ INDUSTRIES

TECHNICAL DATA SHEET

DESCRIPTION OF OPERATION



The Vizzyalarm™ 1-Zone WiFi Alarm is an indoor rated alarm panel, powered by a standard 120VAC wall outlet. The green power LED will illuminate (solid) when powered. The Vizzyalarm™ is a multipurpose alarm panel that can be used for a variety of applications, including but not limited to: septic tanks, sumps, holding tanks, pump chambers, water tanks, flow, pressure, condensate, temperature, and any others where a "dry" contact can be connected to the alarm panel. Connect and register your wireless device to the Alderon™ cloud based Vizzy.Site™ to begin monitoring and receiving text and email alerts for system conditions.

The alarm panel is equipped with audible and visual alarm indication, activated by a normally open or normally closed sensor wired to the terminals and/or the low battery alarm detection. A variety of sensors can be used such as a float switch, pressure switch, or any "dry" type sensor that "closes" during an alarm condition (normally open or normally closed). Installing (3) AA batteries (not included) provides battery backup during power outages. Use the auxiliary contacts to connect to building automation systems (BAS) and phone dialers. Multiple sensors (signaling device) can be connected for expanded monitoring.

An alarm condition occurs when the sensor (signaling device) contact is activated, during which the red alarm LED will illuminate (solid), buzzer will annunciate (solid), and the auxiliary contacts will activate. The alarm condition will stay on until the sensor is deactivated. If the test/silence pushbutton is pressed during an alarm condition, it will silence the buzzer while the alarm LED remains on (solid) with activated auxiliary contacts (alarm LED slow flash). The silence condition will reset when the sensor deactivates and the alarm panel will auto reset for the next alarm cycle.

STANDARD FEATURES

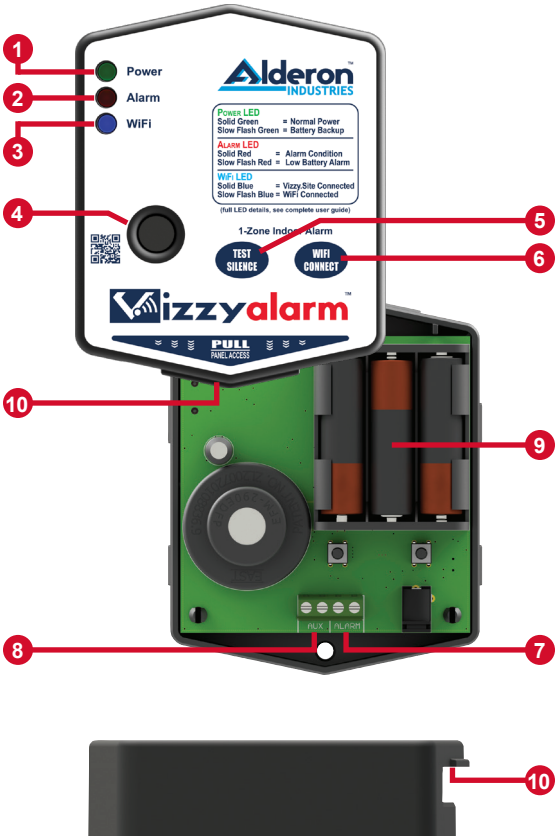

(1) Power LED - A green LED illuminates (solid) on the front of the alarm panel to indicate the power is on.

(2) Alarm LED - During an alarm condition, the red alarm LED will illuminate (solid/slow flash) on the front of the alarm panel.

(3) WiFi LED - A blue LED illuminates (slow flash) when a WiFi connection is established and (solid) when connected to Vizzy.Site™.

(4) Alarm Buzzer - The alarm buzzer will annunciate (solid) in addition to the visual indication provided by the red alarm LED during an alarm condition.

(5) Test/Silence Pushbutton - Press to test the alarm; all LEDs should illuminate (quick flash) and buzzer should annunciate (quick pulse) after approximately 5-6 seconds. During an alarm condition, press to silence the buzzer.

(6) WiFi Connect Pushbutton - Press to select either WPS or HTTP mode and establish a WiFi connection to an IP address.

(7) Sensor Inputs - Connect a field installed sensor to the terminals from the monitoring area.

(8) Auxiliary Contacts - Interface with an external device including BAS systems and phone dialers. The normally open dry contacts can switch 30VDC, 700mA maximum (each).

(9) Battery Backup - Install (3) AA batteries (not included) for battery backup during power outages. The green power LED will illuminate (slow flash) during battery backup mode to conserve battery power.

(10) Panel Access - Pull the cover off to access the panel, includes an open wiring compartment to safely route wires while connecting sensors and auxiliary dry contacts.

SPECIFICATIONS

Vizzyalarm™ 1-Zone WiFi Alarm, Panel Only

Primary Power
120VAC, 50/60 Hz

Circuit Board Primary Power
11.1VDC, 500mA maximum

Circuit Board Secondary Power
4.5VDC, (3) standard AA batteries
(battery backup; not included)

Field Connection Sensor
3-10VAC/DC, 10mA minimum
(signaling device)

Auxiliary Contacts
30VDC, 700mA maximum *(each)*
Normally Open

LEDs
Green *(power)*, Red *(alarm)*, and Blue *(Vizzy/WiFi)*

Buzzer
85 dB @ 10-feet

Wall-Mounted Power Supply
120VAC, 50/60 Hz *(input)*
11.1VDC, 500mA maximum *(output)*
(6-foot cord)

Enclosure
Thermoplastic
5 x 4 x 1.3 *(inches)*
Type 1, Indoor
Removable Cover

Certifications
CSA *(US and Canada)*
FCC Part 15 *(US and Canada)*

Three-Year Limited Warranty

MECHANICAL DRAWING

Vizzyalarm™ (cover on)

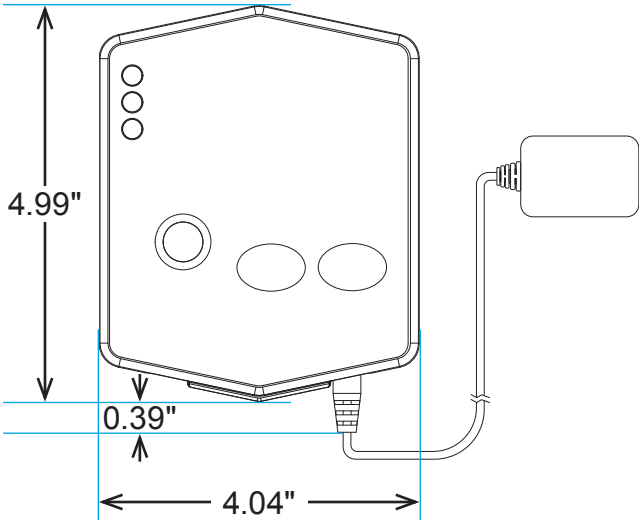

Vizzyalarm™ (cover off)

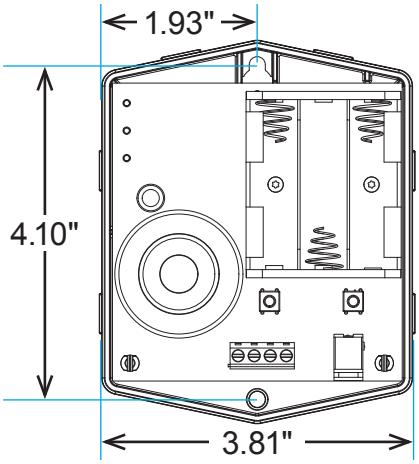

Vizzyalarm™ (side view)

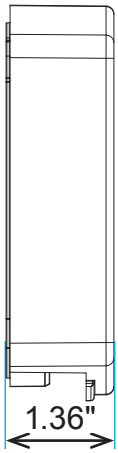

ORDERING INFORMATION

VZW-021A1B1D
1 2 2 2

Customized Model Number:			
MODEL # BOX 1	MODEL # BOX 2	MODEL # BOX 2	MODEL # BOX 2
VZW-02			

PART NUMBER	DESCRIPTION (Alarm Panel includes: Auto Reset, Battery Backup, and Auxiliary Contacts)
2009592	Vizzyalarm™ 1-Zone Indoor WiFi Alarm (Alarm Panel Only)

VIZZYALARM™ WIFI MONITORING SYSTEM - EXPANDABLE SERIES
Choose from the list of components below to customize a Vizzyalarm™ WiFi Monitoring System for your specific application. A maximum of three (3) sensors can be used with the alarm, recommended for one per zone. For multiple sensors, use a junction box for wiring.

NUMBER	CATEGORY		TYPE / EXAMPLE
1	Base Alarm Panel		VZW-02 = Vizzyalarm™ WiFi, 1-Zone Alarm, 120VAC
2	Sensors and Floats	QTY	**TYPE / EXAMPLE** (select quantity of each sensor and float option, add to Model Box(es) 2 above for custom part number)
			X = No Sensors or Floats
			A = WaterSpotter™ Flood Sensor, PWS Series, 15' Cable
			B = Alarm Advisor™ Sump Sensor with Bracket, 15' Cable
			C = 15' Narrow Angle Control Switch, Normally Open (high level), Stainless Steel Pipe Clamp
			D = 20' Narrow Angle Control Switch, Normally Open (high level), Stainless Steel Pipe Clamp
			E = 15' Narrow Angle Control Switch, Normally Closed (low level), Stainless Steel Pipe Clamp
			F = 20' Narrow Angle Control Switch, Normally Closed (low level), Stainless Steel Pipe Clamp