Instructions

Duct Mount Accessory
Q5016



Table of Contents

DESCRIPTION 1

FEATURES. 1

OPERATION 1

SPECIFICATIONS. 2

INSTALLATION 2
- Detector Location 2
- Tools for Assembly 4
- Tools for Detector Test 4

Q5016 PANEL ASSEMBLY MOUNTING 4

MOUNTING THE DETECTOR. 6

INLET AND OUTLET TUBES 7

ASSEMBLING THE MONITORING CHAMBER . 8

AIR FLOW MONITORING 9

MAINTENANCE 9

DEVICE REPAIR AND RETURN. 9

ORDERING INFORMATION 10

SPARE PARTS. 10
- Spare Parts List. 10

DET-TRONICS

INSTRUCTIONS

Duct Mount Accessory
Q5016

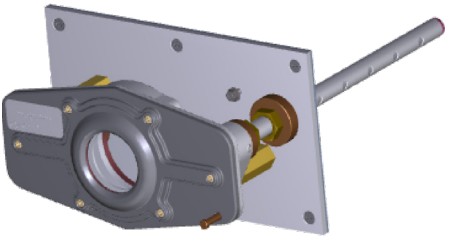

DESCRIPTION

The Detector Electronics Model Q5016 Duct Mount Accessory is used with the Model U5015 Det-Tronics® SmokeWatch™ Explosion Proof Smoke Detector to detect smoke within air handling duct work. Mounted to the exterior of the duct wall, the Q5016 utilizes the differential pressure created between the inlet (sampling) and outlet (exhaust) tubes to drive a continuous air sample through the SmokeWatch measurement chamber. The Q5016 is provided with all necessary tubes and fittings to enable proper operation with a model U5015 SmokeWatch smoke detector (sold separately). The Q5016 is designed for hazardous industrial and commercial applications.

FEATURES

- Rugged design for environmental extremes
- Designed to operate effectively with smoldering and rapidly growing fires
- Has the ability to annunciate fault, ensuring no undisclosed failures
- Works with a small volume of air
- Meets UL268A

OPERATION

The Q5016 is an accessory that is used with the Det-Tronics U5015 SmokeWatch to provide smoke detection monitoring within duct work. Duct air velocity drives a cross-duct air sample into the upstream sample inlet tube, which in turn routes the air sample into the detector. The downstream air sample outlet tube returns the air sample back into the duct. The critical parameter for proper operation of the Q5016 is that all sample tubing connections and duct penetrations must be completely sealed and without any leakage. The mounting plate is provided with an NBR sheet gasket to ensure a proper seal on flat mounting surfaces.

One inlet tube and one outlet tube are furnished with each accessory. Outlet tubes are 1 foot (0.3 meters) in length. The length of the inlet tube must be specified at the time of order and are available for ducts in the following widths: 1, 3, 6, or 9 feet (0.3, 0.9, 1.8, or 2.95 meters).

The length of the inlet tube is determined by the width of the duct to be monitored. The inlet tube should span the entire width of the duct. Select the shortest inlet tube that exceeds the width of the duct to be protected. It can then be cut to the exact length during installation.

Inlet tubes are .92 inch (2.34 cm) outside diameter, and are notched on one end to enable proper installation into the access ports on the Q5016 mounting plate. The inlet tube includes small pre-drilled inlet holes, which must be aligned to face directly into the airflow (upstream) in order to capture airflow and generate proper differential pressure. Tubes are compression-fit into the body. A stop plug is provided for the end of the inlet tube to ensure that all airflow is directed towards the SmokeWatch detector.

The Q5016 Smoke Duct Accessory works exclusively with the U5015 SmokeWatch smoke detector. For information on the operation, wiring and alarm of the U5015 smoke detector, please reference manual number 95-8723.

©Detector Electronics Corporation 2020

Last Manual Update: 11/2020

SPECIFICATIONS

MATERIALS:

BODY—
Aluminum, 6000 series.
Finish: MIL-DTL-5541 Type II Class 1A

SAMPLING TUBES—
Galvanized steel tubing .92 inch (2.34 cm) dia.
Inlet tube: available for 1, 3, 6, or 9 foot (0.3, 0.9, 1.8 or 2.95 meter) wide ducts.

Outlet Tube: 1 foot (0.3 meter) standard length tube.

FASTENERS—
Stainless steel.

DIMENSIONS—
Refer to Figure 1.

AIR VELOCITY RANGE—
300 to 4000 ft/min (91.44 to 1219.2 meters/min).

INGRESS PROTECTION—
NEMA TYPE 4X

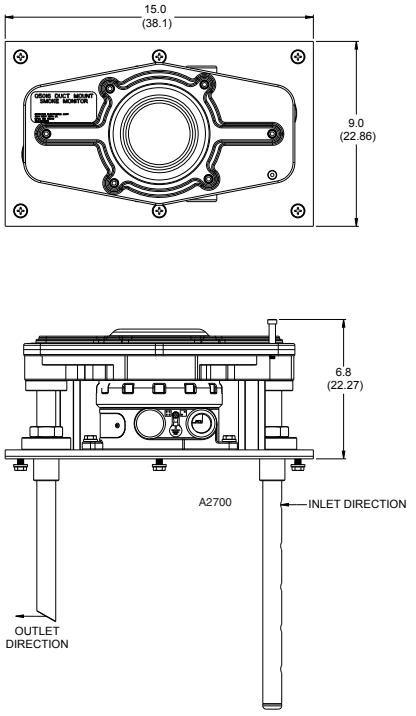

Figure 1—Q5016 Dimensions in Inches (cm)

ACCESSORY SHIPPING WEIGHTS—
Box 1 (Includes Q5016 Duct Accessory + one 1 ft outlet tube + box + instruction manual).
Box 2 (Includes inlet tube in shipping container).

Box 1 = 21.45 lbs. (9.73 kg).
Box 2 = Will vary depending on the tube length and number of tubes.

Individual Tube Weight:
1 ft = 0.65 lbs.
3 ft = 1.50 lbs.
6 ft = 2.85 lbs.
9 ft 8 in = 4.45 lbs.

TOTAL INSTALLED WEIGHTS—
Includes Q5016 Duct Accessory + one outlet tube + one 3 ft. inlet tube + one U5015, 2-port model.

Q5016 -1 / U5015 = 22.1 lbs. (10.03 kg)

Q5016-3 / U5015 = 22.95 lbs. (10.41 kg)

Q5016-6 / U5015 = 24.3 lbs. (11.02 kg)

Q5016-010 / U5015 = 25.9 lbs. (11.75 kg)

NOTE
The U5015 should not be installed in areas in which ammonia, hydrogen sulfide and chlorine are normally present.

INSTALLATION

The Q5016 Air Duct Smoke Detector accessory mounts externally on any duct wall with the air inlet (sample) and outlet (exhaust) air tubes extending into the duct to provide a continuous cross sectional sampling of the air moving through the air handling system.

DETECTOR LOCATION

Detectors can be mounted in the supply system downstream of the filters, or in the return system at the point of entry into a common return duct (Figure 2). Whenever possible, detectors that are mounted on a return duct should be at a distance equivalent to six duct widths from any duct openings, sharp bends, branch connections, or deflection plates. For additional information regarding the location and spacing of duct smoke detectors, refer to the National Fire Protection Association (NFPA) Standard 90A, Installation of Air Conditioning and Ventilation Systems and NFPA Standard 72 for Automatic Fire Detectors or your local codes.

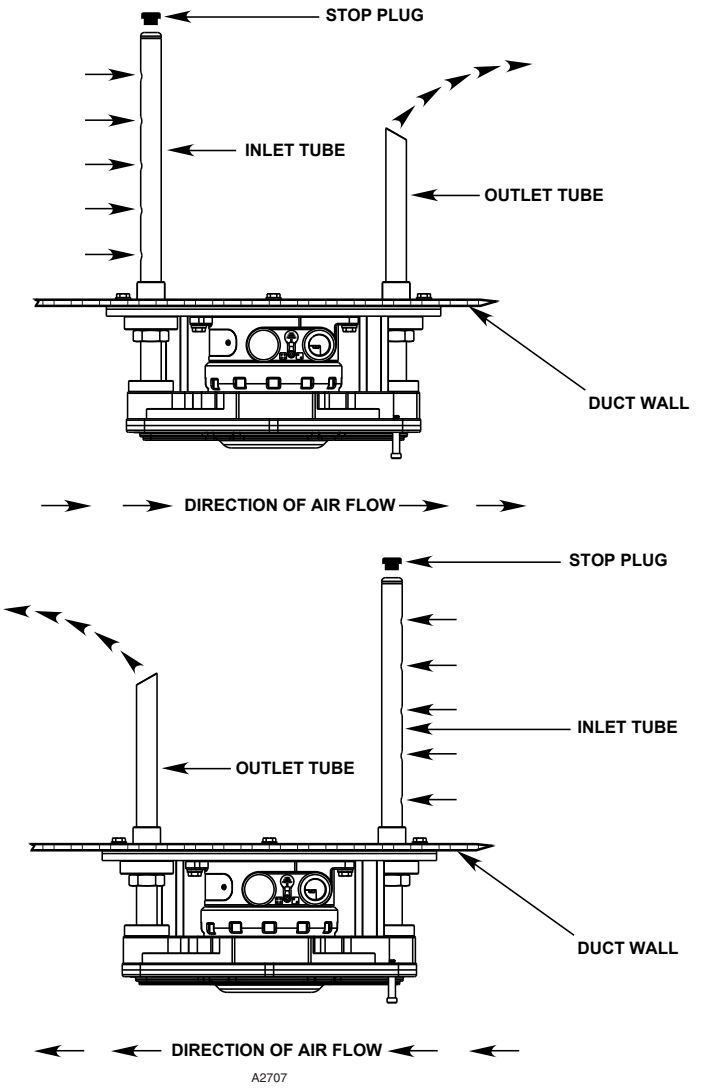

Figure 2—Tube position and orientation

Tools Required for Assembly and Mounting:

1/2 inch Box End, Socket, or Crescent Wrench
3/16 inch Hex Key
3/8 inch Hex Key
1-3/8 inch Open End, or Crescent Wrench
Drill
Drill bits -11/32 inch and 1-5/16 inch
Center punch
Hammer
Panel mounting template (included)
Access panel kit (if required)

Tools Required for Detector Test:

Calibrated manometer capable of measuring 0.015 - 2.0 inches (0.38 to 50.80 mm) of H_2O
Differential pressure adaptors 013655-001

Components for the Q5016 Accessory will arrive in two shipments. One will contain the duct mount assembly and outlet tube. The other will contain the inlet tube of desired length. See Figure 4 for parts call out. The U5015 Smoke Detector, which will be assembled to the Q5016 Duct Mount Panel Assembly, is sold separately.

Q5016 PANEL ASSEMBLY MOUNTING

1. The Q5016 duct accessory should be installed in an easily accessible location approximately six ducts widths from bends, duct openings, or deflection plates (see Figure 3). These locations provide fairly uniform, non-turbulent air flow. If no access panel is present at the desired mounting location, an access opening will need to be created above or adjacent to the installation point to facilitate attachment of the Q5016 to the duct wall.

NOTE

To ensure proper operation of the sampling tubes, observe proper inlet and outlet tube position and orientation as illustrated in Figure 2.

2. Proper horizontal mounting orientation of the Q5016 occurs when the shoulder bolt is located in the lower right-hand corner of the smoke monitoring chamber assembly (test-fitting the smoke monitoring chamber onto the panel assembly may be required prior to mounting to discern proper tube orientation). If mounting vertically, mount so that the cover is able to swing downwards (note direction of airflow for inlet and outlet tube placement).

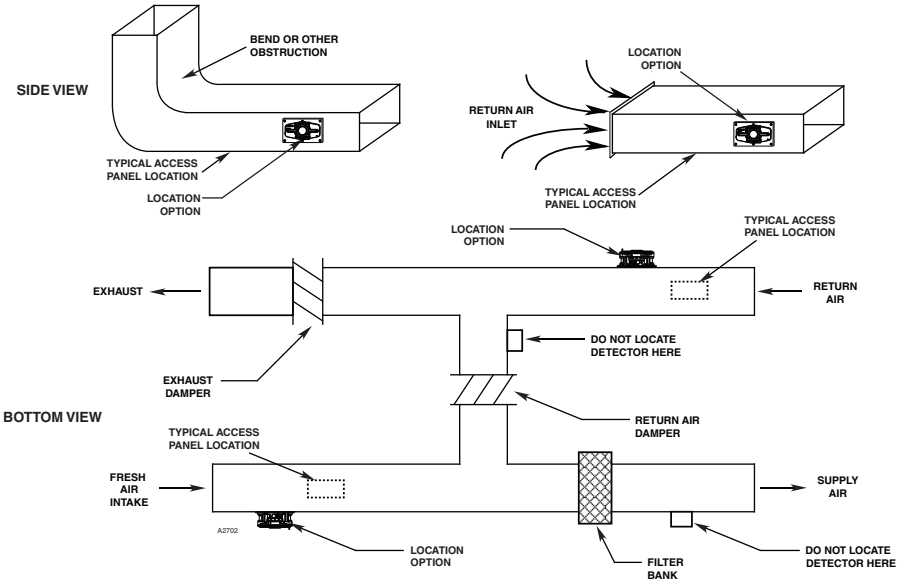

Figure 3—Q5016 Placement in duct

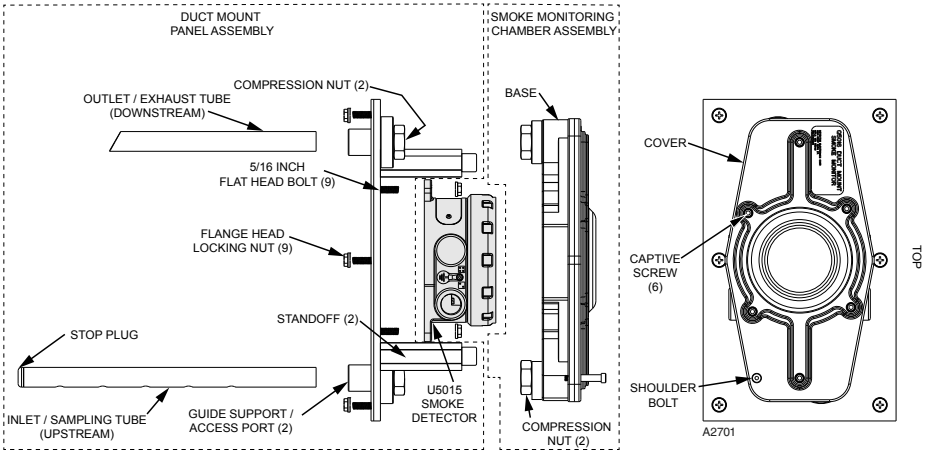

Figure 4—Parts of the Q5016 assembly

3. Lay the fastening pattern template (Figure 5) onto the duct in a position to monitor the duct in a horizontal or vertical orientation. Ensure that there will be enough room to open the cover of the Q5016.
4. Center punch the hole locations. Remove template and, using an 11/32 inch drill bit, drill six clearance hole locations for the 5/16 inch screws. Using a 1-5/16 inch drill bit, drill two hole locations for the inlet and outlet guide supports.

IMPORTANT

If the duct is more than 3 feet (1 meter) wide, drill a 1-5/16 inch diameter hole directly opposite of the inlet access port on the opposing duct wall. This will be necessary to support inlet tubes that are longer then 3 feet (1 meter). After installation, seal opposing duct wall where the tube penetration occurred.

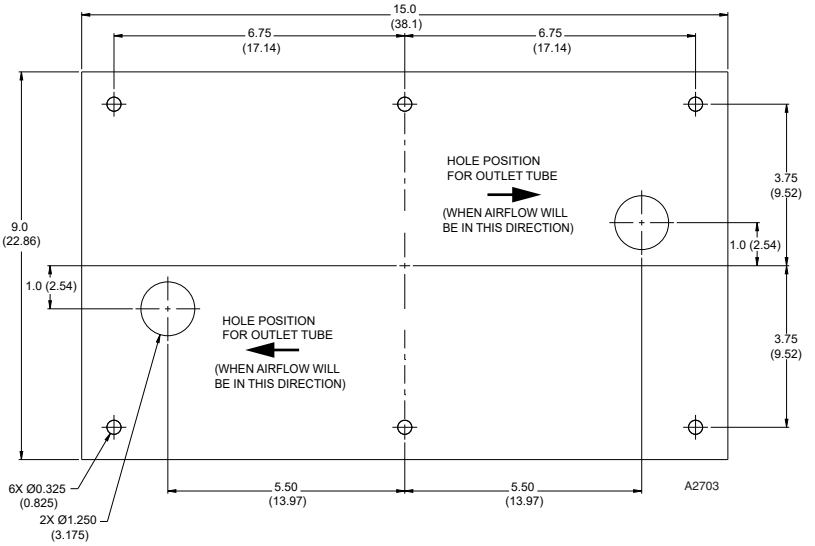

Figure 5—Q5016 Template dimensions in Inches (Centimeters)

5. Remove the six lock nuts from the perimeter of the plate. The screws are threaded through the plate, and should remain in place (Figure 6).

6. Line up the panel assembly with the drilled hole pattern in the duct wall and insert the screws. Holding the panel in place, reach through the access panel opening, and thread the flange head lock nuts, onto the screws. Tighten with a wrench until secure. Washers or support plates can be added if additional support is needed before the lock nuts are applied.

7. Seal the access panel door, as additional assembly will be completed from the outside of the duct.

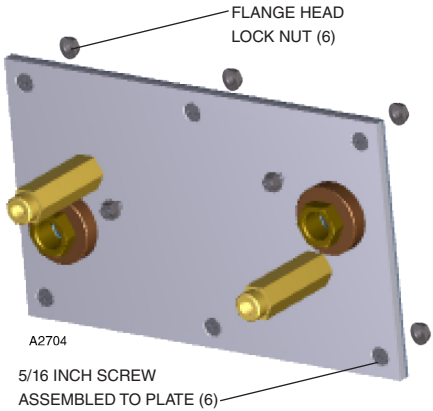

Figure 6—Q5016 Duct mount panel assembly and hardware

NOTE

Prior to installation of detector please reference NEMA SB 13-2012 (Section 7.2) for more information for in-duct detectors

MOUNTING THE DETECTOR

1. Remove the three flange head lock nuts on the plate (Figure 7). Place the U5015 Smoke Detector over the hole locations, centering it in the slots. Replace and fasten the nuts to secure the detector to the plate.

2. Remove the red transport cover from the U5015 Detector, if applicable.

3. Remove the sensor head and wire the unit according to the wiring instructions in the U5015 manual to the desired configuration.

4. Once wiring is complete, replace the sensor head and screw on the captive ring until it is fully seated. Replace and tighten the lock nuts.

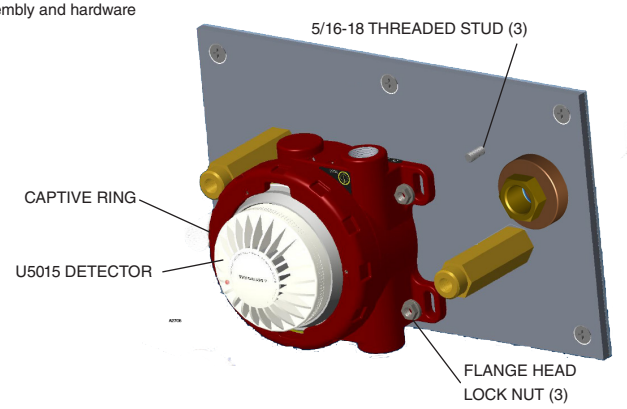

Figure 7—U5015 Smoke Detector mounted on Q5016 plate assembly

INSERT INLET AND OUTLET TUBES

1. Working from outside the duct, loosen the hex compression nut on the mounting plate assembly for each access port in order to release pressure from the internal O-ring.
2. Insert the outlet tube into the correct access port (depending on air flow direction). Ensure that the notched end of the inlet tube is external to the duct wall and the tapered end is inside the duct.
3. From outside of the duct, insert the inlet tube into the correct access port. Ensure that the notched end is external to the duct wall and the end with holes is inside the duct. The stop plug must be installed.

NOTE

The inlet tube should span the entire length of the duct. If the inlet tube is too long, it will need to be cut to size, The overall length of the inlet tube should be approximately 4 inches (10.2 cm) longer than the width of the duct to accommodate installation through the access port and into the smoke monitoring chamber.

NOTE

When cutting an inlet (sampling) tube, always cut the end opposite of the notch (see Figure 8). If the end with the notch is cut, the tube will not seat in the connector fitting properly, and proper orientation may not be possible. Ensure that the end of the tube is then de-burred. When the inlet tube is cut to the proper length, install the stop plug securely into the end of the tube. See figure 9.

IMPORTANT

To ensure proper detector operation, it is essential that the stop plug be installed at the end of the inlet tube.

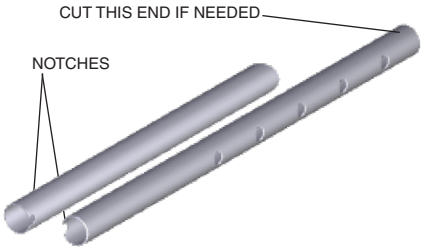

Figure 8—Outlet and inlet tube notches



Figure 9—Inlet tube with stop plug

ASSEMBLING THE MONITORING CHAMBER

1. Use a 3/16 inch hex key to unfasten the six captive screws in the cover from the base. (screws do not require removal from the cover).
2. Lift the cover from the base and swing it down to view the alignment keys for the inlet and outlet tubes, and to access the two socket head cap screws in the interior (Figure 10).
3. Line up the screws in the base to the standoffs on the plate assembly, and using a 3/8 wrench, fasten the socket head cap screws. This will compress the chamber gasket to the U5015 detector.
4. Position the inlet and outlet tubes into the access ports, rotating the notch on the inlet and outlet tube until it lines up with the their individual alignment keys inside each port.

IMPORTANT

The holes in the inlet tube must face the air flow in the duct (upstream). See Figure 2.

5. Tighten all four compression nuts until each O-ring is contacted, then tighten another one-half turn to ensure that the nuts are tightened securely.
6. Swing the cover back up into position and fasten the captive screws.

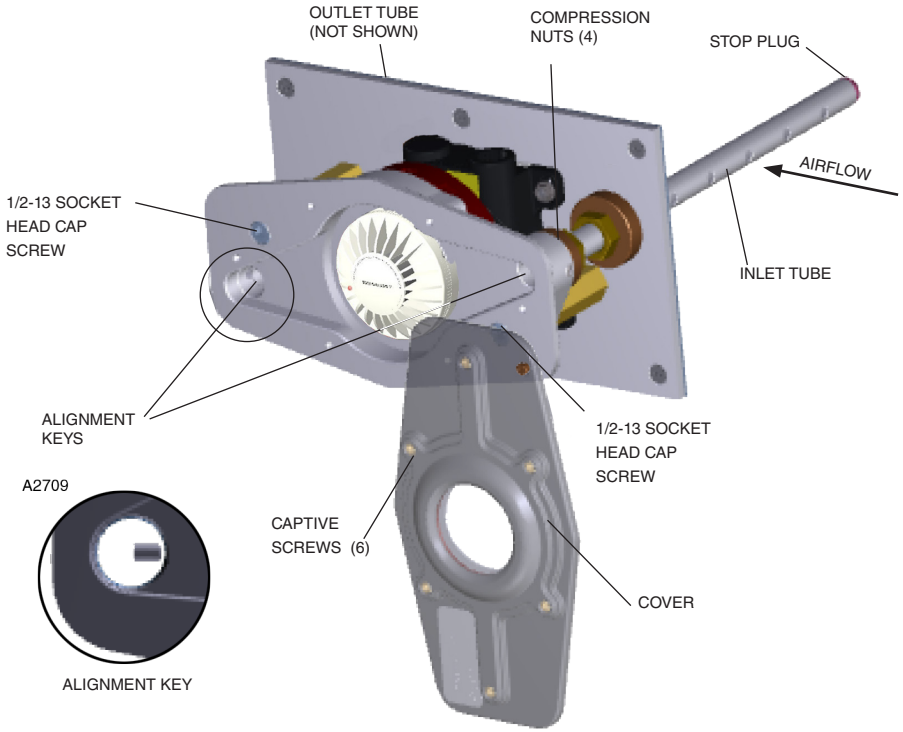

Figure 10—Q5016 Assembling front cover to plate assembly

AIR FLOW MONITORING

The pressure differential between the inlet and outlet tubes should be tested with the detector mounted and air flowing through the duct (See Figure 12).

1. Loosen the six captive screws on the sampling chamber cover, allowing the cover to hang from the shoulder bolt.
2. Plug the flow monitoring adapters (figure 11) into the Q5016. Insert the manometer tubes onto the adapters, “low side” to the outlet tube adapter and “high side” to the inlet tube adapter using the air flow monitoring adapters.



Figure 11—Flow monitoring adapter

3. Using a calibrated manometer capable of differential pressure measurement across the prescribed range, measure pressure differential. The measured differential should be 0.015 to 2.0 inches (0.38 to 50.8 mm) of H_2O.

NOTE

If the pressure differential is not within the specified limits, air from within the duct may not flow past the U5015 smoke detector and improper performance may result. Check the installation to be sure that the outlet and inlet tubes are positioned and oriented properly. Increasing the air flow within the duct should increase the pressure differential, while decreasing the air flow will decrease the pressure differential.

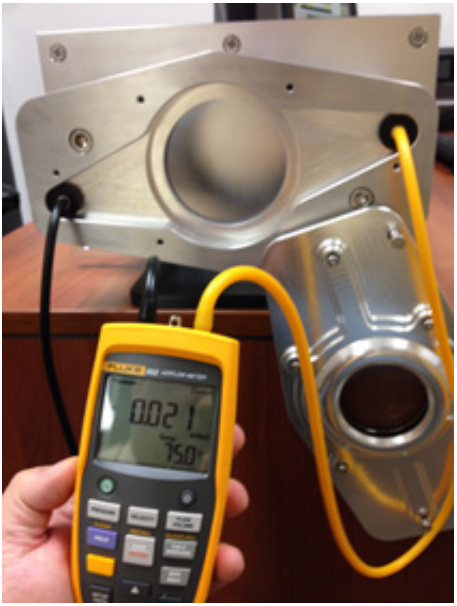

Figure 12—Manometer measurement example (Q5016 not installed)

MAINTENANCE

Per NFPA 72, the detector should be tested at least semi-annually to ensure proper operation using the procedure described in the “Manual self-test” section of the U5015 manual. Proper detector maintenance should also consist of cleaning dust and other contaminants from the inlet and outlet tubes. Pressure differential should be measured on a regular basis to ensure proper air flow through the detector enclosure. Always follow all applicable local codes and standards that pertain to maintenance.

DEVICE REPAIR AND RETURN

Prior to returning devices, contact the nearest local Detector Electronics office so that a Returned Material Authorization (RMA) number can be assigned. A written statement describing the reason for return must accompany the returned device or component to expedite finding the cause of the failure.

Pack the unit properly. Use sufficient packing material as protection from any damage.

Return all equipment transportation prepaid to the factory in Minneapolis.

ORDERING INFORMATION

Q5016 Duct Mount Accessory, includes the following:

- Inlet sampling tube (Specify length at time of order. See below for available lengths.)
- Outlet sampling tube - 1 ft (0.3 m)
- Stop plug for inlet tube
- Instruction manual

Model U5015 SmokeWatch Smoke Detector (Sold separately)

Part Number	Description
013901-001	Q5016-1 Duct mount w/ 1 ft (0.3 m) inlet tube
013901-003	Q5016-3 Duct mount w/ 3 ft (0.9 m) inlet tube
013901-006	Q5016-6 Duct mount w/ 6 ft (1.8 m) inlet tube
013901-010	Q5016-10 Duct mount w/ 9 ft 8 in (2.95 m) inlet tube

SPARE PARTS

Part Number	Description
013660-001	1 ft (0.3 m) inlet tube
013660-003	3 ft (0.9 m) inlet tube
013660-006	6 ft (1.8 m) inlet tube
013660-010	9 ft 8 in (2.95 m) inlet tube
013628-001	1 ft (0.3 m) outlet tube
013653-001	Inlet tube stop plug
400587-001	Locknut, serrated flange
013655-001	Differential pressure adaptors (2X)
013626-001	Chamber gasket
013904-001	Mounting template

CERTIFICATION:

For complete approval details, refer to the U5015 manual (95-8723).

For assistance in ordering a system to fit your application, please contact:

Detector Electronics Corporation
6901 West 110th Street
Minneapolis, Minnesota 55438 USA
Operator: (952) 941-5665 or (800) 765-FIRE
Customer Service: (952) 946-6491
Fax: (952) 829-8750
Web site: www.det-tronics.com
E-mail: det-tronics@carrier.com

This page intentionally left blank

95-8752



FlexSonic® Acoustic Leak Detector



X3301 Multispectrum IR Flame Detector



PointWatch Eclipse® IR Combustible Gas Detector



FlexVu® Universal Display with GT3000 Toxic Gas Detector



Eagle Quantum Premier® Safety System