Project		Catalog #		Type	
Prepared by		Notes		Date	



HALO

QuickLink | RL4-DM 0-10V

Halo QuickLink Low Voltage Lighting Kit
Canless Installation

Typical Applications

• Residential • Light Commercial

Interactive Menu

- Order Information page 2
- Product Specifications page 2
- Photometric Data page 4
- Product Warranty

Product Certification

Refer to ENERGY STAR® Certified Products List.
Can be used to comply with California Title 24 High Efficacy requirements.
Certified to California Appliance Efficiency Database under JA8.

Product Features

Top Product Features

- Single driver powers multiple LED fixtures connected by low voltage cable
- Selectable CCT: 2700K, 3000K, 3500K, 4000K, 5000K
- Direct mount – does not require recessed housing or junction box
- 120-277V input, dimmable down to 5% with select 0-10V dimmers
- Perfect for new construction or remodel work
- Power supply is Non-IC, LED units are IC rated

QuickLink
Low Voltage System



1 POWER SUPPLY & 8 FIXTURES 50ft.

SAVE UP TO 85% WIRING TIME

Order Information

SAMPLE ORDER NUMBER: **(1) RLQL4069SE010DM-8PK, (5) RLQL4069SE010DM**
Purchase kit and additional fixtures separately.

Low Voltage Lighting Kit

Kit includes (1) 90W low voltage remote driver, 50ft of low voltage CMP cable, (8) RLQL4 fixtures

Model	Lumens	CRI/CCT	Driver	Installation	Kit Size
RLQL4 = 4-inch RL QuickLink Low Voltage Lighting	**06** = 600 lumens (nominal)	**9S =** 90 CRI min, 5-color selectable CCT	**E010 =** 120-277V, 0-10V 5% dimming	**DM =** Direct mount canless installation	**-8PK =** 8 pack kit including driver
Notes	**Notes**	**Notes**	**Notes**	**Notes**	**Notes**

Additional Fixtures[1]

Driver NOT included. Connect additional fixtures to Low Voltage Lighting Kit.

Model	Lumens	CRI/CCT	Driver	Installation
RLQL4 = 4-inch RL QuickLink Low Voltage Lighting	**06** = 600 lumens (nominal)	**9S =** 90 CRI min, 5-color selectable CCT	**E010 =** 120-277V, 0-10V 5% dimming	**DM =** Direct mount canless installation
Notes	**Notes**	**Notes**	**Notes**	**Notes**

(1) Maximum 13 fixtures per driver.

Accessories

Accessories
Mounting Frames[2] **HL4NCMF** = 4" new construction mounting frame **HL4RSMF** = 4" round and square mounting frame
Notes
(2) Due to its size, the QuickLink Remote Driver must mount to the building structure, not a mounting frame.

Fixture Count		
Model	**Watts per Downlight**	**Max Downlights**
RLDM 4" 0-10V	6.7 W	13

Product Specifications

Modules

- Module construction includes LED Array, heat sink, reflector, lens, baffle and trim ring.
- Regressed baffle
- Heat sink designed to conduct heat away from the LED Array

Gaskets

- Closed cell gasket achieves restrictive airflow requirements without additional caulking

LED Array

- Plurality of mid power LED's provides a uniform source with high efficiency and long life
- 90 color rendering index (CRI) minimum; R9 greater than 50 provides high color rendering
- Field selectable color temperature, select 2700K, 3000K, 3500K, 4000K or 5000K CCT; color accuracy within 4 SDCM
- Meets ENERGY STAR® color angular uniformity requirements

Optical Assembly

- Regressed lens
- Impact-resistant polycarbonate
- Convex form and lamp-like appearance
- Diffuse for even illumination

Junction Box

- Pre-galvanized steel driver/junction box with captive hinged junction box cover
- Hinged junction box for easier installation into ceiling plenum
- Three 1⁄2" conduit pry-outs
- Two Slide-N-Side™ non-metallic (NM) wire traps allows wiring outside the box
- Accepts NM cable types: 14-2, 14-3, 12-2, 12-3 (U.S.) and 14-2, 14-3, 12-2 (Canadian)
- Three 4-port push wire nuts with clear caps for quick and reliable mains voltage connections
- Integral mounting holes facilitate direct mounting to building structure

Driver

- 90W 120-277V, providing noise free operation
- Continuous flicker-free dimming down to 5% with select 0-10V dimmers
- Inline electrical quick connect provides low voltage connection to fixture fitting

Installation

- Can be installed in 1/2" to 1-1/4" thick ceilings
- Heat treated springs hold fixture fitting securely in the ceiling
- Halo QuickLink Quick Connectors allow for quick installation of additional fixtures

Compliance

- UL Certified for US and Canada
- UL Certified for US and Canada, type IC suitable for direct contact with air permeable insulation
- Not for use in direct contact with spray foam insulation, reference NEMA LSD57-2013
- Wet location listed and IP44 ingress protection
- Air-tite per ASTM-E283-04
- Suitable for use in clothes closets when installed in accordance with the NEC 410.16 spacing requirements
- EMI/RFI emissions per FCC 47CFR Part 15 consumer limits
- Contains no mercury or lead and RoHS compliant
- Photometric testing in accordance with IES LM-79-08
- Lumen maintenance projections in accordance with IES LM-80-08 and TM-21-11
- Compliant with California Title 24 High Efficiency LED under JA8, reference Modernized Appliance Efficiency Database System (MAEDBS) for 2019 JA8 High Efficacy Lighting
- ENERGY STAR® certified (reference "Certified Light Fixtures" database)

Warranty

- Five year limited warranty, consult website for details. www.cooperlighting.com/warranty

Dimensional and Mounting Details

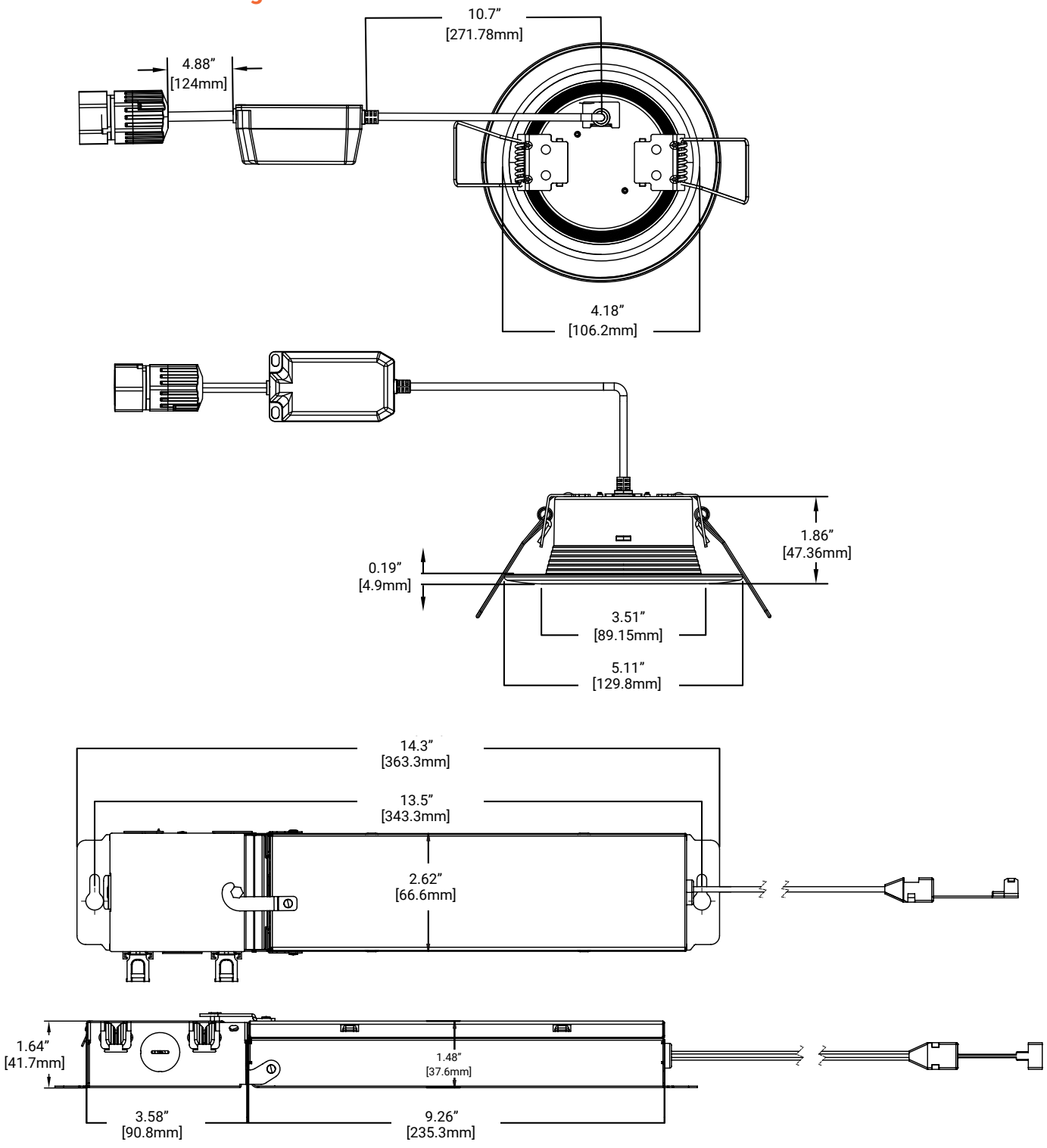

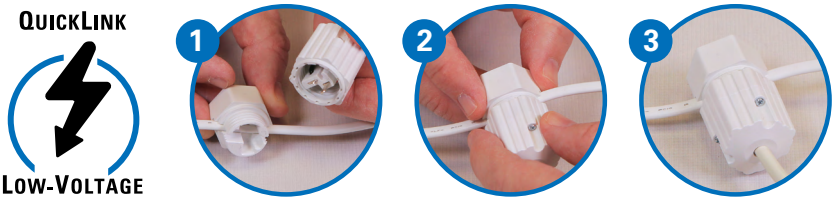

Photometric Data

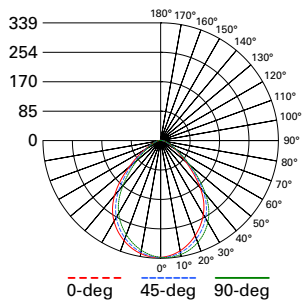

RLLV4069SE010WHDM-3000K-UNIT
Spacing criterion: (0-180) 1.00
(90-270) 1.12
(Diagonal) 1.20
Beam Angle: 85.3°
Field Angle: 129.5°
Lumens: 620
Input Watts: 6.7 W
Efficacy: 92.5 LPW
Test Report:
RLLV4069SE010WHDM-3000K-UNIT.ies

Zonal Lumen	Lumens	% Lumens
0-30	250	40
0-40	392	63
0-60	567	92
0-90	620	100

TM-30-15	Rf = 93
	Rg = 101
CRI/CIE	Ra = 93
	R9 = 67

CCT - Range of 2700K- 5000K

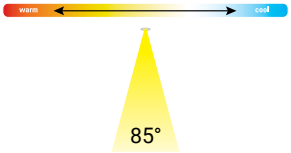

Note: Lumen output may decrease based on distance from power supply and quantity of LED heads used.

Energy Data - 8 Pack Kit

Lumens	4960 lm @ 3000K	
Input Voltage	120V	277V
Input Current	0.505 (A)	0.25 (A)
Input Power	60 (W)	60 (W)
Efficiency	82.7 (LPW)	82.7 (LPW)
Inrush (A)	10 A @ 750 µS	11 A @ 850 µS
THD	≤ 20%	≤ 30%
PF:	≥ 0.9	≥ 0.83
T Ambient	-30 - +40°C	-30 - +40°C
Sound Rating	≤ 22 dba	≤ 22 dba

RLQL4069SE010DM - Individual Fixture					
	CCT	Watts	Lumens	LPW	CRI
Individual Downlight 600LM	2700K	6.8	600	88.2	92
	3000K	6.7	620	92.5	93
	3500K	6.7	640	95.5	94
	4000K	6.7	650	97.0	94
	5000K	6.7	645	96.3	92

RLQL4069SE010DM-8PK - System					
	CCT	Watts	Lumens	LPW	CRI
8PK-System 4800LM	2700K	61.0	4800	78.7	92
	3000K	60.0	4960	82.7	93
	3500K	60.0	5120	85.3	94
	4000K	60.0	5200	86.7	94
	5000K	61.0	5160	84.6	92

Product Specifications

RLQL4069SE010DM

