LEGEND
PLUMBING • INDUSTRIAL • COMMERCIAL • HYDRONICS

SUBMITTAL SHEET

JOB NAME | ITEM TAG

JOB LOCATION | PART NUMBER

CONTRACTOR | DATE

ENGINEER APPROVAL | DATE

NO LEAD BRASS NON-RISING STEM GATE VALVE

T/S-408NL



Pictured
T-408NL

Ideal for residential or commercial potable water applications.

Durable, all-brass body construction and heavy cast iron handwheel.

Electric-induction furnace casting process optimizes molten brass temperatures, resulting in superior cast body and bonnet components.

Inserted bonnet with large stem packing and forged packing nut.

Full-flow waterway reduces pressure drop, permitting consistent flow.

Non-rising stem design is compact and reliable.

Solid, fully-guided disc-wedge opens completely out of the flow path.

Integral seats are precision-ground to match each disc-wedge.

Working Pressure, Non Shock (PSI)

Cold working pressure (CWP): 200 CWP

Saturated steam (WSP): Not suitable for steam service

DIMENSIONS

Size	A (IPS)	A (Sweat)	B	C	Cv
1/2"	1.71	1.69	2.91	2.09	9.75
3/4"	1.81	2.32	3.31	2.13	18.84
1"	2.13	2.72	3.90	2.48	31.82
1-1/4"	2.24	2.93	4.61	2.72	48.83
1-1/2"	2.44	3.33	5.08	3.15	74.65
2"	2.70	3.98	5.98	3.52	86.44
2-1/2"	3.70	4.61	6.89	3.98	106.67
3"	4.02	5.31	8.50	4.37	158.85
4"	4.53	6.36	9.88	6.36	173.44

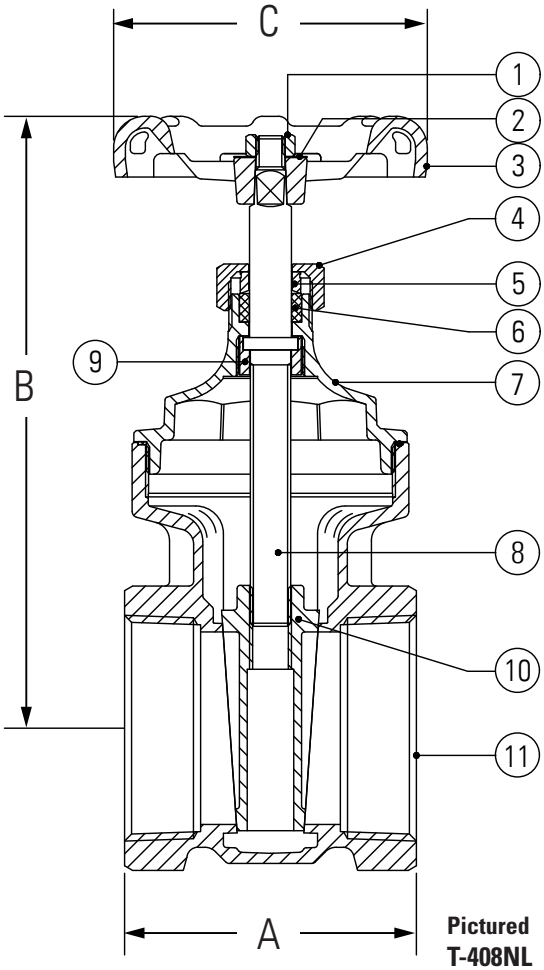

Pictured
T-408NL
Cut-away

MATERIAL SPECIFICATION

	PART	MATERIAL	SPECIFICATION
1	Handwheel nut	Carbon Steel	SAE 1010R
2	Identification disc	Aluminum	A1100
3	Handwheel	Cast iron	JIS ZZ2202
4	Packing Nut	Brass, free-cutting	UNS C37700
5	Packing gland follower (sizes 1-1/4" to 4" only)	Brass, free-cutting	UNS C37700
6	Packing gland	NBR	Commercial Grade
7	Bonnet	Lead free cast brass	UNS 46400
8	Stem	Lead free forged brass (Sizes 1/2" - 2")	UNS 46400
		Lead free cast brass (Sizes 2-1/2" - 4")	UNS 46400
9	Stem locknut	Lead free forged brass	UNS 46400
10	Disc wedge	Lead free cast brass	UNS 46400
11	Body	Lead free cast brass	UNS 46400

Certifications/Listings:
Third party certified
ANSI/NSF 61: Drinking water system components health effects.
ANSI/NSF 372: Drinking water system components lead content.

Standards:
ANSI/ASME B1.20.1: Pipe threads, general purpose, Inch.
ANSI/ASME B16.18: Cast pressure alloy solder-joint pressure fitting.