LEGEND®
PLUMBING • INDUSTRIAL • COMMERCIAL • HYDRONICS

# SUBMITTAL SHEET

| | |
|---|---|
| JOB NAME | ITEM TAG |
| JOB LOCATION | PART NUMBER |
| CONTRACTOR | DATE |
| ENGINEER APPROVAL | DATE |

# NO LEAD BOILER DRAIN

## T/S-521NL and S-521PNL

Full-pattern body, packing and handwheel construction.

Available in nominal 1/2" and 3/4" MNPT, CTS (sweat) or 1/2" PEX inlet x 3/4" MGHT hose thread outlet sizes.

**Working Pressure, Non Shock (PSI)**

Cold working pressure (CWP): 125 psi
Saturated steam (WSP): Not suitable for steam service



**Pictured:**
**S-521PNL**

### MATERIAL SPECIFICATION

| | PART | MATERIAL | SPECIFICATION |
|---|---|---|---|
| 1 | Bonnet | Lead-free cast brass | UNS Alloy C46400 |
| 2 | Body | Lead-free cast brass | UNS Alloy C46400 |
| 3 | Handle | Cast iron | ASTM A48 Class 35 |
| 4 | Stem | Lead-free cast brass | UNS Alloy C46400 |
| 5 | Packing nut | Brass | UNS Alloy C36000 |
| 6 | Stem Packing | NBR (Buna-N) rubber | Commercial grade |
| 7 | Seat washer | NBR (Buna-N) rubber | Commercial grade |
| 8 | Seat retaining screw | Stainless steel | AISI grade 304 |
| 9 | Handle fastener | Cadmium plated steel | AISI 1010 |

### DIMENSIONS

| Size | A | B | C |
|---|---|---|---|
| 1/2" MNPT | 2.60 | 3.60 | 3.40 |
| 3/4" MNPT | 2.60 | 3.70 | 3.50 |
| 3/4" Sweat | 2.60 | 3.75 | 3.55 |
| 1/2" PEX | 2.60 | 4.30 | 4.10 |

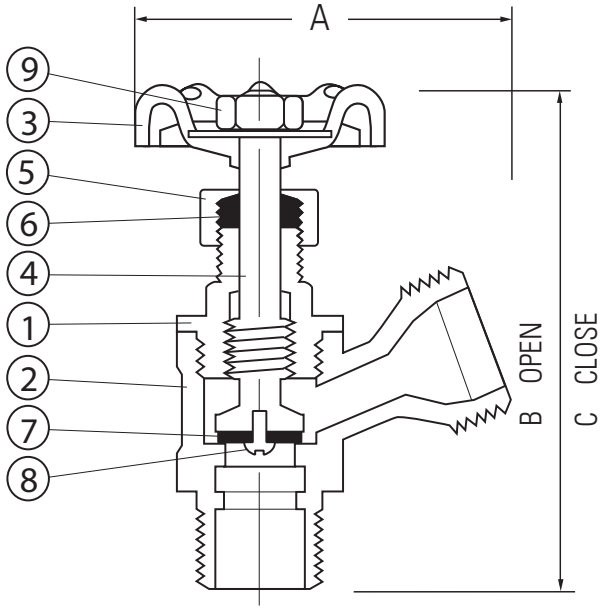


**Pictured:**
**T-521NL**
Cut-away

**Certifications/Listings:**
Third-party certified.
NSF/ANSI 61: Drinking water system components - Health effects.
ASTM F1807: Metal insert fittings utilizing a copper crimp ring or stainless steel clamps.

**Standards:**

ANSI/ASME B1.20.1: Pipe threads, general purpose, Inch
ANSI/ASME B16.18: Cast pressure alloy solder-joint pressure fitting
ANSI/ASME B1.20.7: Hose coupling screw threads, Inch