LEGEND
PLUMBING • INDUSTRIAL • COMMERCIAL • HYDRONICS

SUBMITTAL SHEET

JOB NAME _____ ITEM TAG _____

JOB LOCATION _____ PART NUMBER _____

CONTRACTOR _____ DATE _____

ENGINEER APPROVAL _____ DATE _____

LEAD-FREE BALL TYPE HOSE BIB

T-537NL, T-537LNL and T-540NL

Lead-free design is suitable for all no-lead potable water installations, in full compliance of all lead-free plumbing laws.

Forged brass construction eliminates casting-related leaks.

The positive-shutoff ball-and-seat design is a more durable alternative to traditional stop-type valve designs.

Maintenance-free dual O-ring stem seal eliminates the need for packing-nut tightening.

Smooth quarter-turn operation with all handle configurations.

Ideal for all residential and commercial hose bib requirements.

Model T-540 is equipped with a short lever handle, for water heater installations.

Available in sizes: Combination 1/2" MNPT - 1/2" Sweat x 3/4" GHT and 3/4" MNPT x 3/4" GHT

Working Pressure, non-shock (PSI)

Cold working pressure (CWP): 200 p.s.i.

Saturated steam (WSP): Not suitable for steam service

- Third-party tested and certified in compliance with U.S. Federal Public Law 111-380 (National lead-free plumbing law).
- Certified to ANSI / NSF Standard 61-G
- End connections comply with:

  ANSI / ASME B1.20.1 (MNPT)
  ANSI / ASME B16.18 (CTS solder)

- Manufactured in an ISO accredited facility

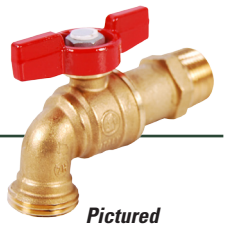

Pictured
Model T-537NL



Pictured
Model T-540NL

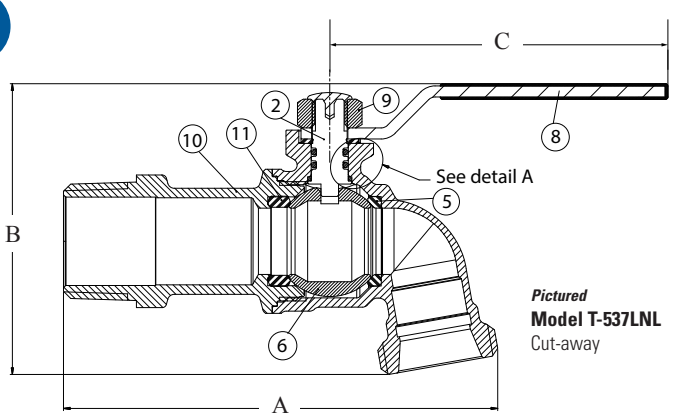

Pictured
Model T-537LNL
Cut-away

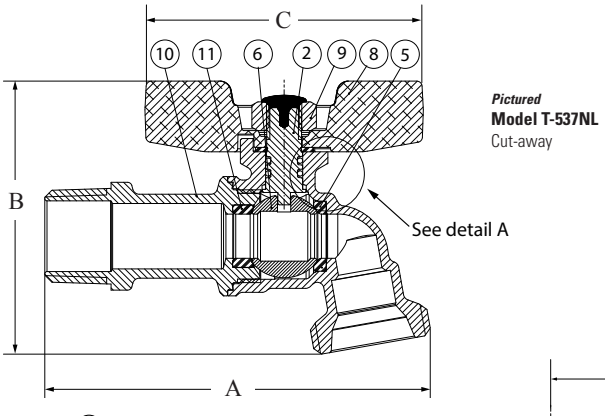

Pictured
Model T-537NL
Cut-away

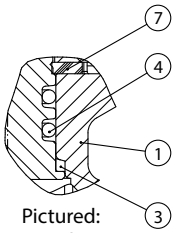

Pictured:
Detail A

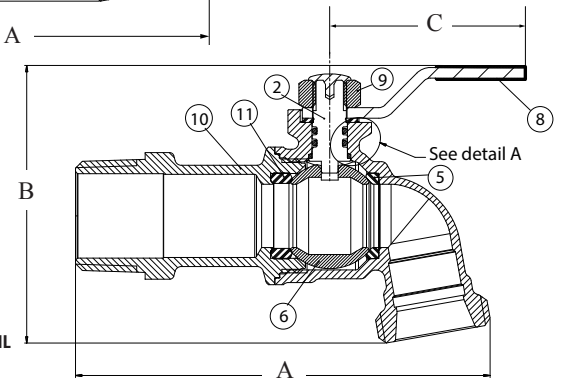

Pictured
Model T-540NL
Cut-away

MATERIAL SPECIFICATION

	PART	MATERIAL	SPECIFICATION
1	Body	Lead-free forged brass	CW510L UNS Alloy C28500
2	Stem	Lead-free chrome-plated forged brass	CW510L UNS Alloy C28500
3	Anti-friction thrust washer	PTFE	Telfon*
4	Stem-O-ring (2)	EPDM rubber	Commercial grade
5	Downstream seat	PTFE	Telfon*
6	Ball	Lead-free chrome-plated forged brass	CW510L UNS Alloy C28500
7	Anti-friction washer	PTFE	Teflon*
8	Handle	T-537: Aluminum	Commercial grade
		T-537L & T-540: Dacromet-coated steel	Commercial grade
9	Handle nut with resin lock	Dacromet coated steel and PVC	Commercial grade
10	End adapter	Lead-free forged brass	CW510L UNS Alloy C28500
11	Upstream seat	NBR (Buna-N)	Commerical grade

*Telfon is a registered trademark of DuPont.

DIMENSIONS

Model	Size	A	B	C
T-537	1/2"	3.43	2.43	2.45
	3/4"	3.87	2.68	2.45
T-537L	1/2"	3.43	2.33	3.00
	3/4"	3.87	2.58	3.00
T-540	3/4"	3.87	2.58	1.85