LEGEND
PLUMBING • INDUSTRIAL • COMMERCIAL • HYDRONICS

SUBMITTAL SHEET

JOB NAME	ITEM TAG
JOB LOCATION	PART NUMBER
CONTRACTOR	DATE
ENGINEER APPROVAL	DATE

NO LEAD TRADITIONAL MULTI-TURN ANGLE-PATTERN CHROME SUPPLY STOPS

T/S-581NL, T-581PNL, S-581ETNL T/S-581RBNL, T/S-581PBNL, T/S-583NL and T/S-581LSNL

Compact,lead-free brass body is machined from a single piece of barstock, providing the highest level of durability and strength.

Thermoplastic stems (except sweat configurations) resist scale and debris build-up better than metallic stems, even in hard water conditions.

Each stop is individually packaged, preventing connection component loss and protecting the stop from contamination.

Available in eleven angle-pattern configurations, including compression, PEX, sweat, extended-tube and FNPT inlet connections.

Available in chrome-plated, polished brass and rough-brass finishes.

Working Pressure, Non Shock (PSI)

Cold working pressure (CWP): 125 PSI

Max service temperature: 180°F*

**Temperatures above 120°F increase the risk of scalding. Consult local code for temperature requirements.*



Pictured
T-581NL



Pictured
S-581NL

DIMENSIONS

(Inlet x Outlet)	A	B(closed)	C
3/8" OD x 3/8" OD	1.43	2.24	2.02
5/8" OD x 3/8" OD**	1.57	2.31	2.02
5/8" OD x 1/4" OD	1.51	2.45	2.02
3/8" FNPT x 3/8" OD	1.46	2.08	2.02
1/2" FNPT x 3/8" OD*	1.57	1.97	2.02
1/2" CPVC x 3/8" OD	1.58	2.73	2.02
1/2" PEX x 3/8" OD	1.43	2.36	2.02
1/2" Tubing sweat x 3/8" OD*	1.44	1.99	2.02
1/2" Sweat extended-tube x 3/8" OD	2.40	6.69	2.02
1/2" FNPT x 1/2" OD	1.67	2.13	2.02
5/8" OD x 1/2" OD	1.58	2.43	2.02
1/2" Tubing sweat x 1/2" OD*	1.52	2.05	2.02
1/2" FNPT x 1/2" or 7/16" OD Slip-joint	1.56	2.07	2.02
5/8" OD x 1/2" or 7/16" OD Slip-joint	1.58	2.38	2.02
1/2" Tubing sweat x 1/2" or 7/16" OD Slip-joint	1.48	2.19	2.02
1/2" FNPT x 3/8" OD with lockshield and loose-key	1.58	2.76	1.24
5/8" OD x 3/8" OD with lockshield and loose-key	1.44	3.10	1.24
1/2" Tubing sweat x 3/8" OD with lockshield and loose key	1.44	2.75	1.24
*Also available in rough brass (unplated)			
**Also available in rough brass (unplated) and polished brass finishes			

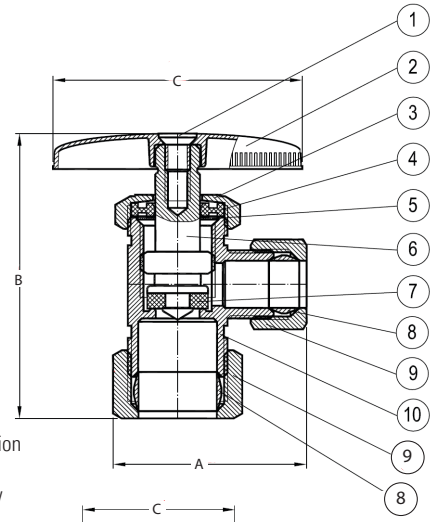

Pictured
O.D. Compression
T-581NL
Cut-Away View

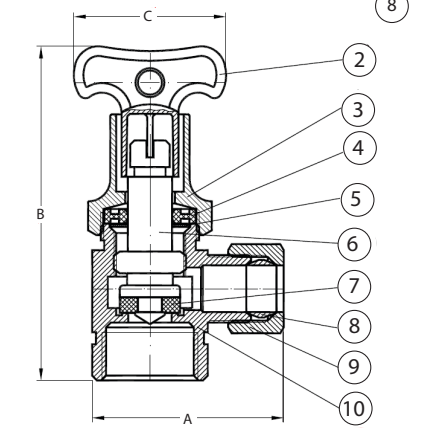

Pictured
Loose-Key
T-581LSNL
Cut-Away View

See Page 2 for Certifications and Standards.

LEGEND
PLUMBING • INDUSTRIAL • COMMERCIAL • HYDRONICS

SUBMITTAL SHEET

JOB NAME	ITEM TAG
JOB LOCATION	PART NUMBER
CONTRACTOR	DATE
ENGINEER APPROVAL	DATE

MATERIAL SPECIFICATION

	PART	MATERIAL
1	Handle screw	Chrome plated brass
2	Handle (or loosekey)	Chrome plated die-cast brass (loosekey only: polished brass finish)
3	Bonnet	Chrome plated forged brass
4	Stem packing	EPDM rubber
5	Anti-friction packing support washer	Stainless steel
6	Stem	Acetal copolymer (Loose-key and sweat configurations: CP lead-free forged brass)
7	Seat washer	EPDM rubber
8	Compression ferrule	Lead-free forged brass*
9	Compression nut	Chrome plated forged brass
10	Body	Lead-free chrome plated forged brass*
11	Extension tube (model S-581ETNL only)	Lead-free chrome plated brass
12	Escutcheon (model S-581ETNL only)	Stainless steel
13	Adapter gasket (1/2" CPVC T-581NL only)	NBR (Buna-N) rubber
14	CPVC tubing adapter (1/2" CPVC T-581NL only)	Virgin CPVC resin
15	Compression nut (1/2" CPVC T-581NL only)	Chrome plated forged brass
16	Slip-joint gasket (model T/S-583NL only)	EPDM rubber
17	Anti-friction washers (two) (model T/S-583NL only)	Lead-free brass
18	Compression nut (model T/S-583NL only)	Chrome plated forged brass

*rough brass (unplated) and polished brass configurations are also lead-free

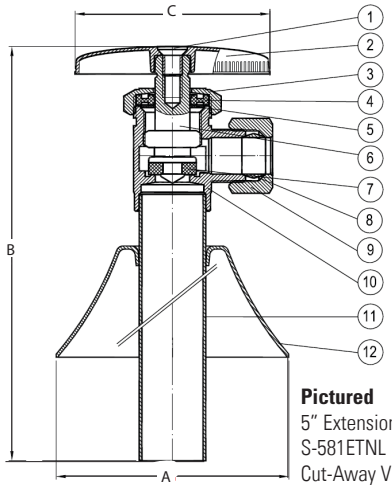

Pictured
5" Extension Tube
S-581ETNL
Cut-Away View

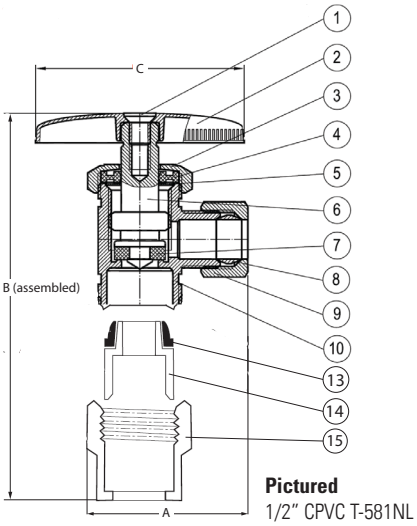

Pictured
1/2" CPVC T-581NL
Cut-Away View

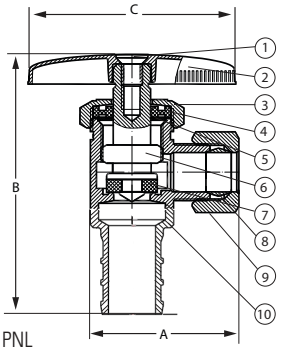

Pictured
PEX Barb T-581PNL
Cut-Away View

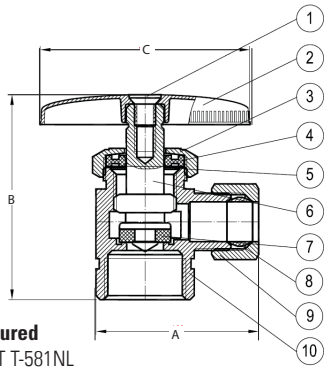

Pictured
FNPT T-581NL
Cut-Away View

Certifications/Listings:

Third-party certified.

NSF/ANSI 61: Drinking water system components health effects.

Standards:

ANSI/ASME B1.20.1: Pipe threads, general purpose, Inch.

ANSI/ASME B16.18: Cast pressure alloy solder-joint pressure fitting.

ASTM F1807: Metal insert fittings utilizing a copper crimp ring or stainless steel clamps.

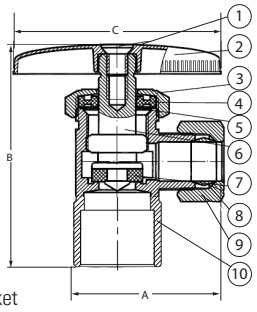

Pictured
Tubing Socket
S-581NL
Cut-Away View

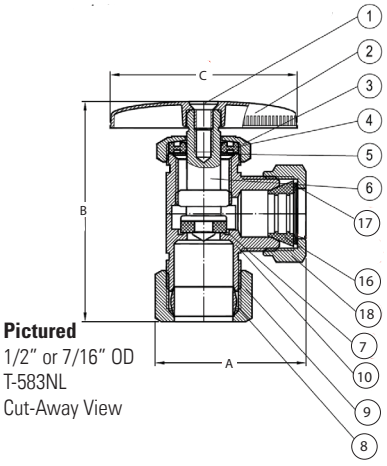

Pictured
1/2" or 7/16" OD
T-583NL
Cut-Away View

See Page 2 for Certifications and Standards.