LEGEND

PLUMBING • INDUSTRIAL • COMMERCIAL • HYDRONICS

SUBMITTAL SHEET

JOB NAME	ITEM TAG
JOB LOCATION	PART NUMBER
CONTRACTOR	DATE
ENGINEER APPROVAL	DATE

NO LEAD DZR FORGED BRASS BALL VALVE

T-2006NL PEX x PEX (F1807)

Durable, DZR forged brass construction is smaller, yet stronger than cast versions making them ideal for confined tubing installations.

Maintenance-free dual O-ring, blowout-proof stem design eliminates the stem packing nut, thereby eliminating the need for periodic nut tightening.

PTFE seats assure a positive shutoff and a longer in-service life over ball valves with other seat types.

Self-cleaning chrome-plated ball resists mineral build-up and scaling typically found in harsh, varying water conditions

Available in nominal sizes 1/2" through 2".

Working Pressure, Non-Shock (PSI)
Cold working pressure (CWP): 400*
Saturated steam (WSP): Not suitable for steam service.

***CAUTION! Exceeds the pressure rating of PEX tubing.**



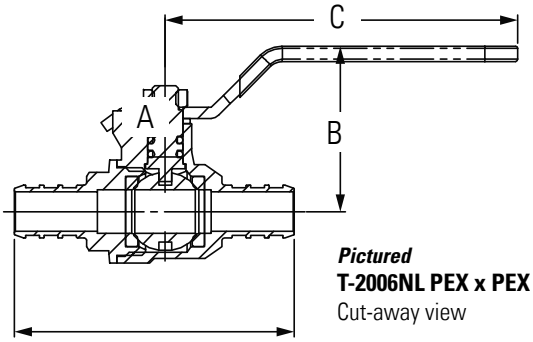

Pictured
T-2006NL PEX x PEX
Cut-away view

MATERIAL SPECIFICATION

	PART	MATERIAL
1	Handle nut	Zinc plated steel
2	Lever handle	Zinc plated steel
3	Anti-friction washer	PTFE
4	Body	DZR Lead-free forged brass
5	Seats (2)	PTFE
6	Ball (1/2"-1-½" (2")	Lead-free chrome plated forged brass Stainless Steel
7	End adapter	DZR Lead-free forged brass
8	Stem O-rings (2)	EPDM Rubber
9	Stem	DZR Lead-free forged brass

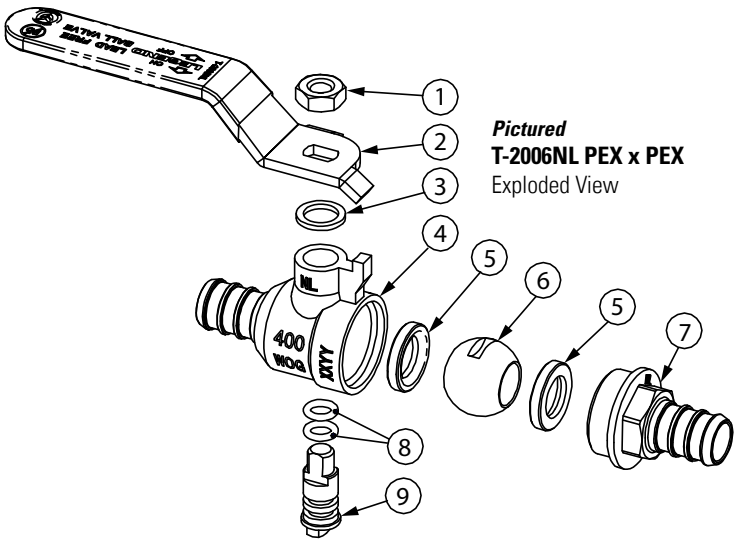

Pictured
T-2006NL PEX x PEX
Exploded View

DIMENSIONS

Size	A	B	C	C_v
1/2"	2.52	1.49	3.17	9.5
3/4"	2.62	1.57	3.17	21
1"	3.21	1.91	4.15	38
1-1/4"	3.58	2.16	5.12	57
1-1/2"	4.11	2.21	5.12	73
2"	5.32	2.49	5.12	135

Certifications/Listing:
Third-party certified
NSF/ANSI 14: Plastic piping system components and related materials.
NSF/ANSI 61: Drinking water system components - Health effects.
ASME A112.4.14: Manually operated valve for use in a plumbing system.
Uniform Plumbing Code (UPC)
National Plumbing Code of Canada

Standards:
ASTM F1807: Metal insert fittings utilizing a copper crimp ring or stainless steel clamps.