LEGEND VALVE

SUBMITTAL SHEET

JOB NAME _____ ITEM TAG _____

JOB LOCATION _____ PART NUMBER _____

CONTRACTOR _____ DATE _____

ENGINEER APPROVAL _____ DATE _____

WAFER-TYPE, DUCTILE IRON BUTTERFLY VALVE

T-335AB, T-335AB-G, T-337AB and T-337AB-G



Epoxy coated wafer body allows easy positioning between flanges

Extended neck will clear most piping insulation applications

Bi-directional flow

100% factory tested

Rigid, phenolic-backed seat allows positive, bubble-tight shutoff

Raised seat face eliminates the need for companion flange gaskets

Heavy-duty lockable ten-position lever handle

Models T-335AB-G and T-337AB-G are equipped with a pre-installed gear operator and handwheel, in place of the lever handle.

Working Pressure, Non-Shock (PSI)
Cold Working Pressure (CWP): 200 psi

Working Steam Pressure (WSP): 125 psi (T-335AB & T-335AB-G Only)

Maximum service temperatures with pressures:
T-335AB & T-335AB-G: Compatible with steam up to 250˚ F at 125 psi or less

T-337AB & T-337AB-G: Compatible with media types other than steam up to 180˚ F at 200 psi or less

Special order disc options:
T-335DI & T-337DI: Ductile iron disc

T-335SS & T-337SS: 316 Stainless steel disc

- Flange connection features of the valve's body conform to ANSI class 125/150 flange dimensions (see flange data chart).
- Manufactured in conformance to the following standards:
  - MSS SP-67
  - API 609
  - AWWA C504
  - EN 593
- Manufactured in an ISO accredited facility

MATERIAL SPECIFICATION

	PART	MATERIAL	SPECIFICATION
1	Body	Ductile Iron, epoxy coated	ASTM A536 UNS F32800
2	Disc	Aluminum Bronze (T-335AB, T-337AB)	ASTM B148 UNS C95800
	(optional disc material)	Ductile Iron (T-335DI, T-337DI)	ASTM A536 UNS F32800
	(optional disc material)	Stainless Steel (T-335SS, T-337SS)	ASTM A351 CF8M (investment cast 316)
3	Seat:		
	T-335AB & T-335AB-G	EPDM	Commercial grade
	T-337AB & T-337AB-G	Buna-N (NBR)	Commercial grade
	Seat backing	Phenolic resin	
4	Upper shaft	Stainless steel	AISI 410 stainless steel
5	Lower shaft	Stainless steel	AISI 410 stainless steel
6	Bushings (upper and lower)	PTFE	DuPont Teflon* PTFE
7	O-ring:		
	T-335AB & T-335AB-G	EPDM	Commercial grade
	T-337AB & T-337AB-G	Buna-N (NBR)	Commercial grade
8	Half ring	Stainless steel	AISI 316 stainless steel
9	Washer	Stainless steel	AISI 316 stainless steel
10	Retainer ring	Stainless steel	AISI 316 stainless steel

*Teflon is a registered trademark of DuPont

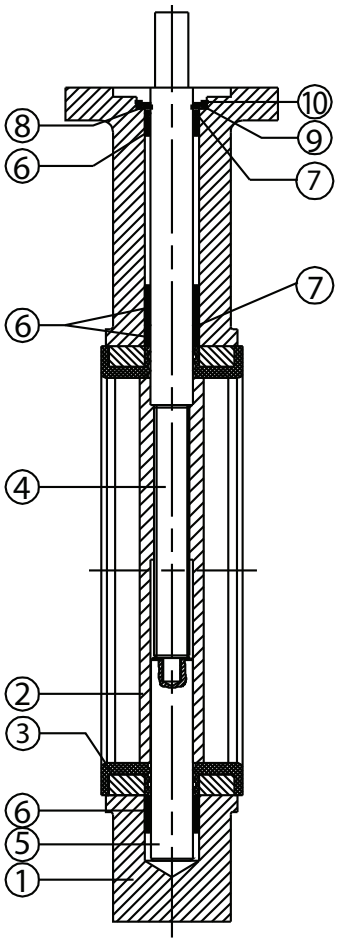

Pictured
T-335AB, T-337AB
Body, cut-away side view

WAFER-TYPE, DUCTILE IRON BUTTERFLY VALVE

T-335AB, T-335AB-G, T-337AB and T-337AB-G

DIMENSIONS

Size	A	B	C	D	E	F*	G*	hole dia.*
2"	2.07	5.59	0.75	2.89	0.43	2.76	3.54	0.39
2-1/2"	2.54	6.10	0.75	3.17	0.43	2.76	3.54	0.39
3"	3.11	6.34	0.75	3.66	0.43	2.76	3.54	0.39
4"	4.10	7.09	0.75	4.33	0.43	2.76	3.54	0.39
5"	4.86	7.60	0.75	4.83	0.55	2.76	3.54	0.39
6"	6.14	8.07	0.75	5.47	0.55	2.76	3.54	0.39
8"	7.99	9.84	0.98	6.89	0.67	4.02	4.92	0.47
10"	9.88	11.10	1.58	8.19	0.87	4.02	4.92	0.47
12"	11.89	12.84	1.58	9.61	0.87	4.02	4.92	0.47

Size	ISO 5211*	L	W	d	X	Y	Torque ft./lb
2"	F07	1.69	0.39	0.50	8.07	8.35	11.06
2-1/2"	F07	1.81	0.39	0.50	8.07	8.86	12.54
3"	F07	1.81	0.39	0.50	8.07	9.09	16.23
4"	F07	2.05	0.47	0.62	10.04	10.24	25.08
5"	F07	2.20	0.55	0.74	10.04	10.75	35.41
6"	F07	2.20	0.55	0.74	10.04	11.22	53.85
8"	F10	2.36	0.67	0.87	13.98	13.19	114.33
10"	F10	2.68	0.87	1.12	13.98	14.45	-
12"	F10	3.07	0.95	1.24	13.98	16.18	-

*Note: This information is applicable to the actuator mounting flange portion of the valve's body

Pictured
T-335AB, T-337AB
Disc open, side view

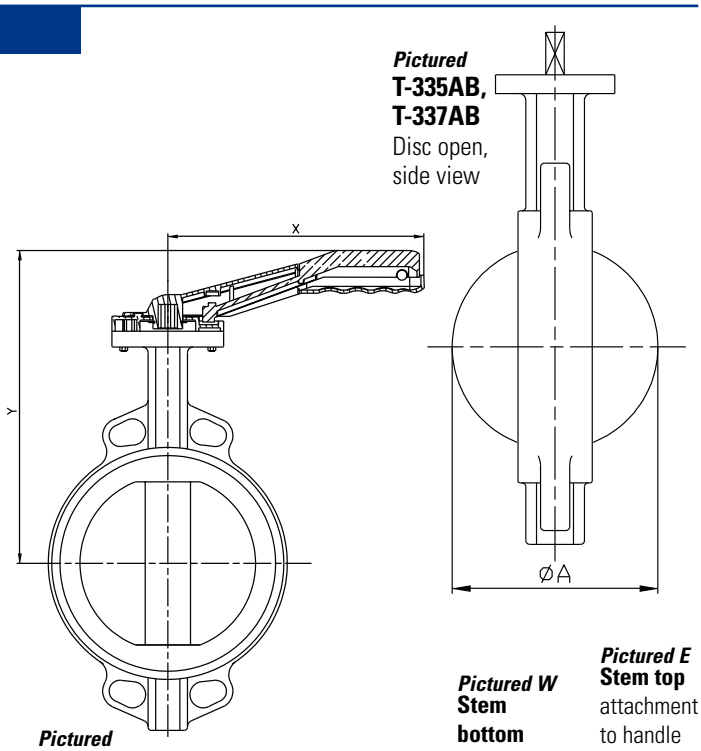

Pictured
T-335AB, T-337AB
Dimensions

Pictured W
Stem bottom attachment to disc

Pictured E
Stem top attachment to handle or gear operator

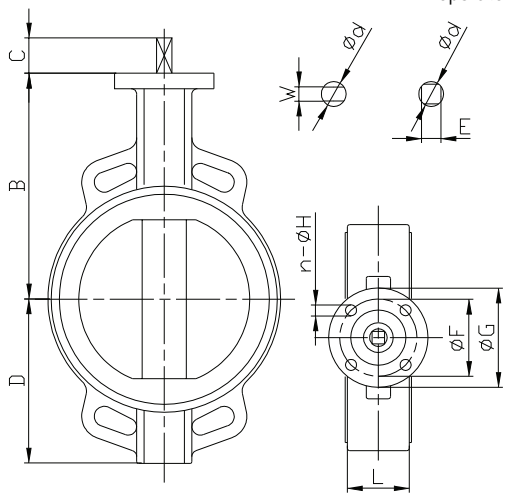

CLASS 125/150 FLANGE DATA

Nominal size	Bolt circle diameter	Bolt size	Number of bolt holes	Flange diameter
2"	4.75	5/8" - 11	4	6"
2-1/2"	5.5	5/8" - 11	4	7"
3"	6	5/8" - 11	4	7.50"
4"	7.5	5/8" - 11	8	9"
5"	8.5	3/4" - 10	8	10"
6"	9.5	3/4" - 10	8	11"
8"	11.75	3/4" - 10	8	13.50"
10"	14.25	7/8"- 9	12	16"
12"	17	7/8"- 9	12	19"

X,Y & Dia. DIMENSIONS T-335AB-G, T-337AB-G (GEAR OPERATOR)

Size	X	Y	Dia.
2"	5.51	6.69	5.24
2-1/2"	5.51	7.21	5.24
3"	5.51	7.44	5.24
4"	5.51	8.19	5.24
5"	5.51	8.70	5.24
6"	5.51	9.17	5.24
8"	8.74	11.18	8.74
10"	8.74	12.44	8.74
12"	8.74	14.17	8.74

CV FACTORS

CV Factors expressed in GPM at various disc openings (in degrees):

VALVE SIZE	10	20	30	40	50	60	70	80	90
2"	0.119	1.04	7.28	16.18	33.52	61.27	108.66	134.1	136.41
2-1/2"	0.185	2.89	12.72	32.37	57.8	106.35	194.21	283.22	298.25
3"	0.267	6.13	25.43	57.8	104.04	181.49	325.99	531.76	589.56"
4"	0.467	11.33	46.24	104.04	182.65	308.81	560.66	951.39	1070.46"
5"	0.744	18.5	80.92	173.4	304.03	497.08	885.5	1560.6	1734"
6"	1.07	97.1	130.63	265.88	456.62	739.84	1266.98	2138.6	2508.52"
8"	1.9	129.47	245.07	468.18	783.77	1253.1	2063.46	3520.02	4441.35"
10"	23.12	179.18	357.2	682.04	1143.28	1838.04	3139.7	5508.34	5796.18"
12"	55.49	327.15	443.9	861.22	1448.47	2379.05	4325.75	7883.92	10669.88"

GEAR OPERATOR ASSEMBLY: OPERATIONAL RATIOS

Size	Ratio
2"	24:1
2-1/2"	24:1
3"	24:1
4"	24:1
5"	24:1
6"	24:1
8"	32:1
10"	32:1
12"	50:1

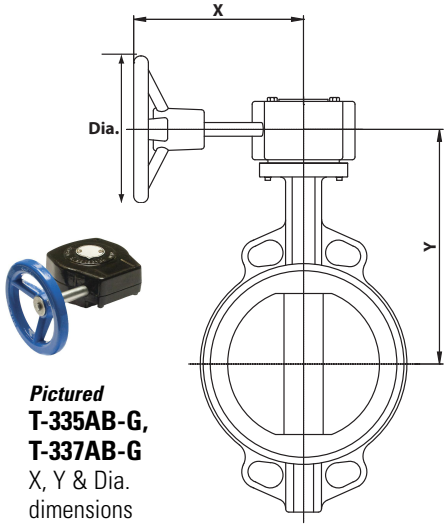

Pictured
T-335AB-G, T-337AB-G
X, Y & Dia. dimensions