LEGEND
PLUMBING • INDUSTRIAL • COMMERCIAL • HYDRONICS

SUBMITTAL SHEET

JOB NAME | ITEM TAG

JOB LOCATION | PART NUMBER

CONTRACTOR | DATE

ENGINEER APPROVAL | DATE

BALL VALVE HOSE BIBB

Model T-537

The 1/2" T-537 has a combination

1/2" MIP x 1/2" solder inlet.

ISO-9002

Working Pressure, Non Shock (PSI)

Cold working pressure (CWP): 200 CWP

Saturated steam (WSP): N/A

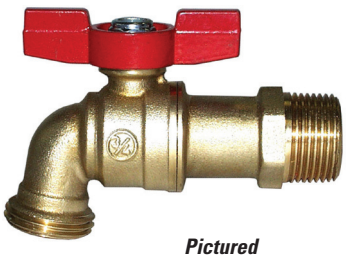

Pictured
Model T-537

MATERIAL SPECIFICATION

	PART	MATERIAL	SPECIFICATION
1	T-handle	Aluminum	
2	O-ring	Viton	EP851
3	Anti-friction washer	PTFE	Dupont Teflon
4	Body	Forged brass	ASTM B124, UNS C37700
5	Stem	Forged brass	ASTM B124, UNS C37700
6	Handle nut	Steel	
7	Seat#1	PTFE	Dupont Teflon
8	Ball	Chrome plated brass	ASTM B124, UNS C37700
9	Seat#2	Nitrile Rubber	BUNA-N
10	End adapter	Forged brass	ASTM B124, UNS C37700

*Teflon is a registered trademark of DUPONT

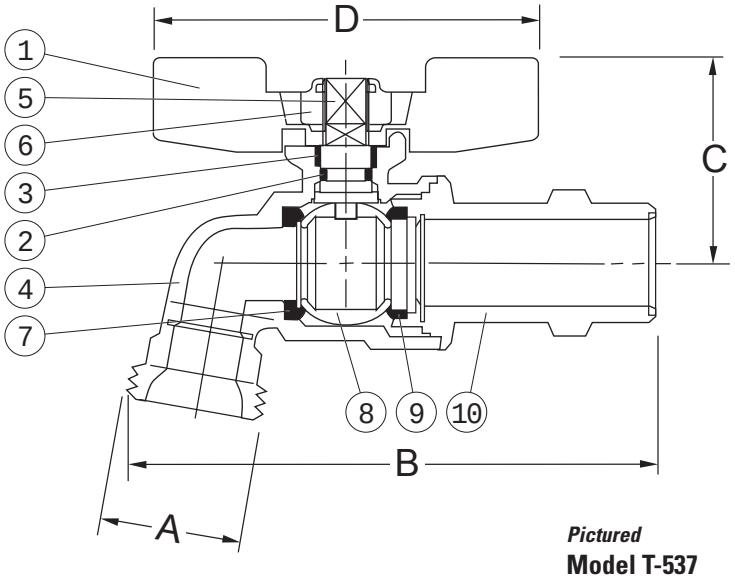

Pictured
Model T-537
Cut-away

DIMENSIONS

Size	A	B	C	D
*1/2"	.75	3.30	1.24	2.50
3/4"	.75	3.70	1.33	2.50