LEGEND
PLUMBING • INDUSTRIAL • COMMERCIAL • HYDRONICS

SUBMITTAL SHEET

JOB NAME | ITEM TAG

JOB LOCATION | PART NUMBER

CONTRACTOR | DATE

ENGINEER APPROVAL | DATE

BRASS SILLCOCKS

T/S-541 and T/S-541LS



Full-pattern body, stem and handwheel construction

Electric-induction furnace casting process optimizes molten brass temperatures, resulting in superior cast body and bonnet components

Approved for potable water applications

Equipped with a stem packing and packing nut design, which are superior to packless-bonnet stem seal designs

All 3/4" GHT (garden hose) outlets accept 3/4" hose-thread-mounted vacuum breakers, including our models T-553, T-553C, T-554, T-555 and T-556*

Female NPT threaded, copper tubing sweat or PEX barb inlet end connections available

T-541LS and S-541LS models feature a removable handwheel and extended lock-shield packing nut, for tamper-resistant applications

**These models are not included with the T/S-541 or T/S-541LS and do not appear on this submittal sheet. Please check your local backflow prevention code requirements and contact Legend for additional submittal information.*

- Truesdail Labs certified to ANSI / NSF Standards 61-9
- End connections comply with ANSI / ASME B1.20.1 (FNPT), ASME B16.18 (CTS) and ASTM F1807 (PEX)
- Manufactured in an ISO accredited facility

Working Pressure, Non Shock (PSI)

Cold working pressure (CWP): 125 psi

Saturated steam (WSP): Not suitable for steam service

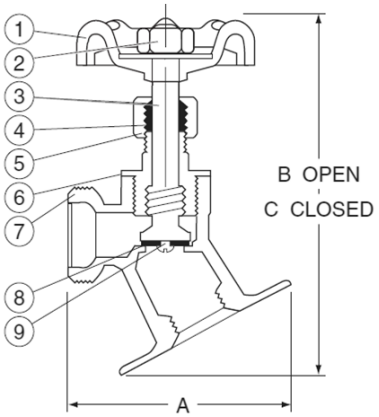

Pictured
T-541
Cut-away

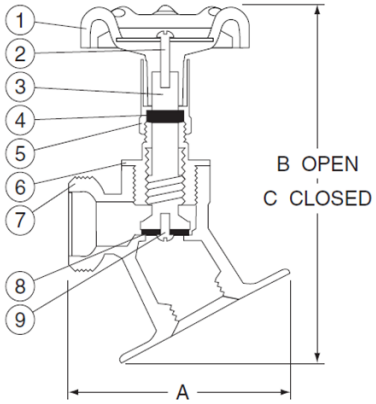

Pictured
T-541LS
Cut-away

MATERIAL SPECIFICATION

	PART	MATERIAL	SPECIFICATION
1	Handle	Cast iron	ASTM A48 Class 35
2	Handle fastener	Cadmium plated steel nut (T/S-541)	AISI 1010
		Brass screw (T/S-541LS)	ASTM B16 C36000
3	Stem	Cast brass	ASTM B584 C85700
4	Stem packing	NBR (Buna-N) rubber	Commercial grade
5	Packing nut (T/S-541)	Brass	ASTM B16 C36000
	Lockshield (T/S-541LS)	Brass	ASTM B16 C36000
6	Bonnet	Cast brass	ASTM B584 C85700
7	Body	Cast brass	ASTM B584 C85700
8	Seat washer	NBR (Buna-N) rubber	Commercial grade
9	Seat retaining screw	Stainless steel	AISI grade 304

DIMENSIONS

Size	A	B	C
1/2" FNPT x 3/4" MGHT	2.31	3.89	3.55
3/4" FNPT x 3/4" MGHT	2.37	3.98	3.71
1/2" Swt. x 3/4" MGHT	2.10	3.75	3.47
3/4" Swt. x 3/4" MGHT	2.39	3.89	3.64
1/2" FNPT x 3/4" MGHT Lockshield	2.09	4.22	4.07
1/2" Swt. x 3/4" MGHT Lockshield	2.16	3.98	3.81
3/4" FNPT x 3/4" MGHT Lockshield	2.46	4.35	4.22
1/2" PEX insert x 3/4" MGHT	2.09	3.75	3.46