LEGEND
PLUMBING • INDUSTRIAL • COMMERCIAL • HYDRONICS

SUBMITTAL SHEET

JOB NAME | ITEM TAG

JOB LOCATION | PART NUMBER

CONTRACTOR | DATE

ENGINEER APPROVAL | DATE

LEAD-FREE CHROME PLATED COMMERCIAL SILLCOCK

T-545NL, T-545VBNL, T-546NL, & T-546VBNL

Lead-free design is suitable for all no-lead potable water installations, in full compliance of all lead-free plumbing laws.

Full-pattern body, stem and bonnet construction is more durable than competitor's reduced-material examples.

Ideal for frequent-use residential, commercial or industrial water applications.

Tamper-resistant vacuum breaker (-VB models) is not designed for continuous-pressure operation.

Models T-546NL & T-546VBNL feature a removable key and extended lock-shield bonnet for tamper-resistant applications.

Available in 1/2" or 3/4" FNPT Inlet x 3/4" GHT Outlet end connections.

- Third-party tested and certified in compliance with U.S. Federal Public Law 111-380 (National lead-free plumbing law).
- UPC / IAPMO certified to ANSI / NSF 61-G
- Vacuum breaker complies with:
  ASSE 1011
  UPC / IAPMO
  CAN / CSA B64.2.
- End connections comply with:
  ANSI / ASME B1.20.1 (FNPT)
  ANSI / ASME B1.20.7 (male garden hose)
- Manufactured in an ISO accredited facility.

Working Pressure, Non Shock (PSI)
Cold working pressure (CWP): 125 p.s.i.
Saturated steam (WSP): Not suitable for steam applications



Pictured
Model T-545NL



Pictured
Model T-546NL



Pictured
Model T-545VBNL



Pictured
Model T-546VBNL

MATERIAL SPECIFICATION

	PART	MATERIAL	SPECIFICATION
1	Handle (T-545NL & T-545VBNL)	Die-cast zinc	Commercial grade
	Loosekey (T-546NL & T-546VBNL)	Chrome plated brass	ASTM B584 UNS C85700
2	Handle screw	Plated carbon steel	JIS G3507-1
3	Packing nut	Chrome plated forged brass	ASTM B124 UNS C37700
4	Stem packing	Graphite	Commercial grade
5	Bonnet / Lockshield	Chrome plated forged brass	ASTM B124 UNS C37700
6	Bonnet seal	EPDM rubber	Commercial grade
7	Seal support washer	304 Stainless steel	AISI Grade 304
8	Stem	Lead-free chrome plated brass	UNS Alloy C46400
9	Seat washer	EPDM	Commercial grade
10	Seat screw	Lead-free forged brass	JIS H3260-C2600W
11	Body	Lead-free chrome plated brass	UNS Alloy C46400
12	Vacuum breaker end adapter	Lead-free chrome plated brass	UNS Alloy C46400
13	Vacuum breaker set screw	Chrome plated forged brass	ASTM B124 UNS C37700
14	Vacuum breaker gasket	EPDM rubber	Commercial grade
15	Vacuum breaker seat	EPDM rubber	Commercial grade
16	Vacuum breaker piston	Polyacetal (Polyoxymethylene) resin	Commercial grade POM M90
17	Vacuum breaker spring	304 Stainless steel	AISI Grade 304
18	Vacuum breaker body	Lead-free chrome plated brass	UNS Alloy C46400

SUBMITTAL SHEET

JOB NAME | ITEM TAG

JOB LOCATION | PART NUMBER

CONTRACTOR | DATE

ENGINEER APPROVAL | DATE

LEAD-FREE CHROME PLATED COMMERCIAL SILLCOCK (CONT.)

T-545NL, T-545VBNL, T-546NL, & T-546VBNL

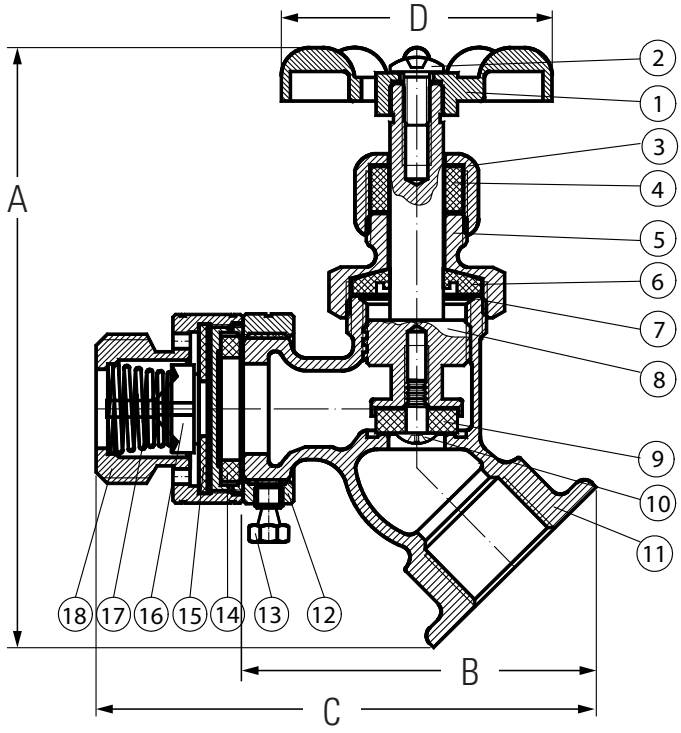

Pictured
T-545VBNL
Cut-away

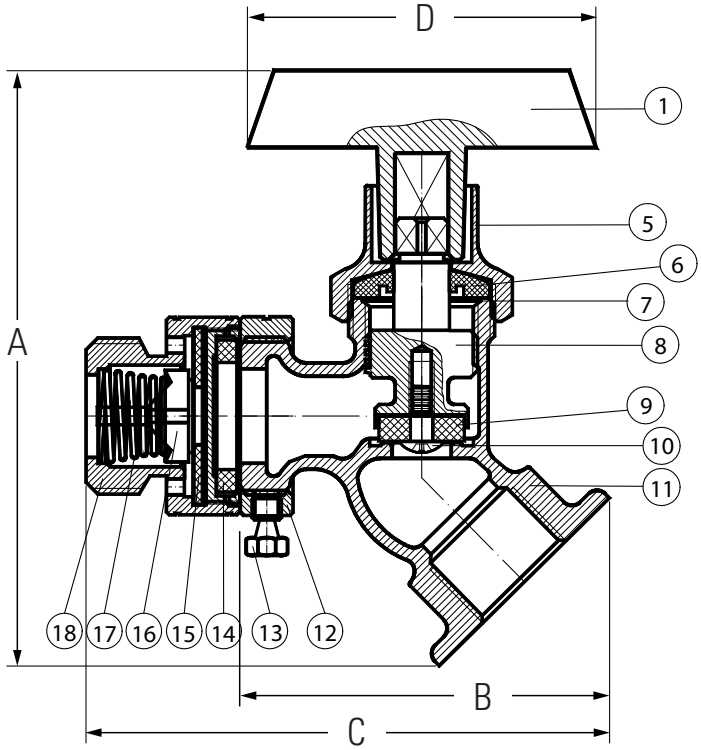

Pictured
T-546VBNL
Cut-away

DIMENSIONS

Model / Size	A	B	C	D
T-545NL				
1/2" FNPT x 3/4" MGHT	4.19	2.67	-	1.89
3/4" FNPT x 3/4" MGHT	4.37	2.86	-	1.89
T-546NL				
1/2" FNPT x 3/4" MGHT	3.97	2.67	-	2.32
3/4" FNPT x 3/4" MGHT	4.15	2.86	-	2.32
T-545VBNL				
1/2" FNPT x 3/4" MGHT	4.19	2.67	3.49	1.89
3/4" FNPT x 3/4" MGHT	4.37	2.86	3.68	1.89
T-546VBNL				
1/2" FNPT x 3/4" MGHT	3.97	2.67	3.49	2.32
3/4" FNPT x 3/4" MGHT	4.15	2.86	3.68	2.32