AIG-101 Series

2-port Modbus RTU/ASCII/TCP to MQTT/Azure/AWS cloud-ready gateways



Features and Benefits

- Supports generic MQTT client
- Supports MQTT connection with built-in device SDKs for Azure/AWS cloud
- Supports Modbus RTU/ASCII/TCP master/client
- Supports Modbus TCP server
- Built-in network traffic monitoring and diagnostic tool for easy troubleshooting
- Supports data buffering using store and forward and datalogger
- Seamless integration with Moxa ioLogik /UPort devices to easily extend I/O and serial interfaces
- Built-in data processing function to eliminate programming efforts
- -40 to 70°C operating temperature range
- LTE Cat.1 US, EU, and APAC models available

Certifications

Introduction

The AIG-101 Series gateways are entry-level IIoT gateways that connect Modbus RTU/ASCII/TCP devices to cloud platforms and applications such as Azure, AWS, and MQTT. The AIG-101 as a Modbus master can integrate existing Modbus devices with cloud platforms, effortlessly collecting and transmitting data to the Azure and AWS clouds. Moreover, the gateways also support the Modbus TCP slave mode, enabling simultaneous transmission of data to a cloud platform and local SCADA system.

Effortless Extension of I/O and Serial Interfaces

As the number of field sites increases, additional I/O or serial interfaces are required to connect devices, such as sensors, meters, and inverters, for collecting and processing the large amount of data that is generated. A typical approach is to install remote I/O and device servers to extend the interfaces, but the configuration settings required can be a nightmare for most users. To provide an extremely simple configuration process for interface extension, AIG-101 gateways have better integration and come with an intuitive wizard that can configure Moxa ioLogiks and UPorts with just a few clicks.

Built-in Ready-to-use Data Preprocessing Functions, No Coding Required

Energy Management Systems mainly collect energy data such as average power generation and energy efficiency. This data is then used to display on-site conditions, observe the energy trend, and optimize energy usage. Most edge systems require additional programming to process the data required by energy management system. The AIG-101 can preprocess the edge data and directly send meaningful data to the energy management systems. The intuitive UI enables easy configuration of the IIoT gateway settings to collect and process data.

Secure Remote Access Reduces Maintenance Costs

The AIG-101 comes with powerful troubleshooting tools to diagnose issues with protocol statuses and capture and analyze traffic packets, enabling engineers to remotely identify the root cause of issues and quickly bring the operation back to normal. The tools also provide secure remote access to the AIG-101 to enable the maintenance engineers to directly access it, saving a lot of time and effort and reducing system downtime in energy management systems.

Appearance

AIG-101-T-AP/EU/US

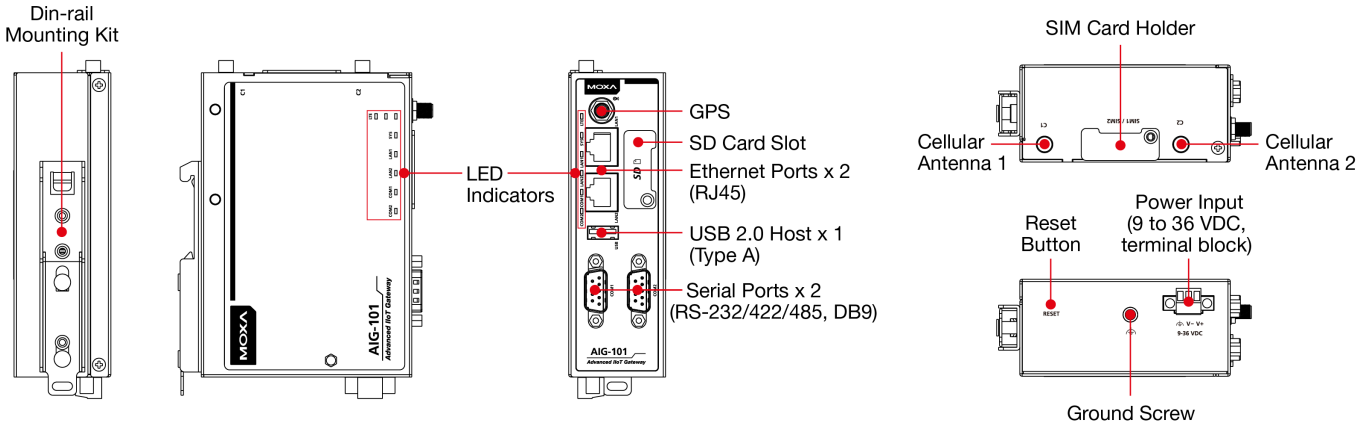

AIG-101-T

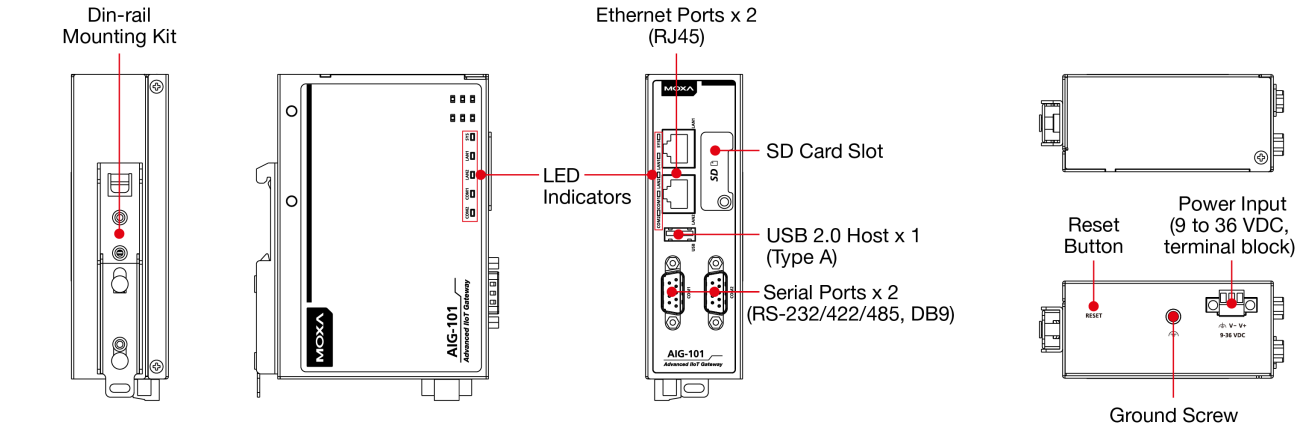

Specifications

Computer

CPU	Armv7 Cortex-A8 1 GHz
DRAM	1 GB DDR3
Storage Slot	microSD slots x 1 SD 2.0 interface (SDHC/SDXC)
Storage Pre-installed	8 GB eMMC
No. of Tags Supported	1500

Computer Interface

Ethernet Ports	Auto-sensing 10/100 Mbps ports (RJ45 connector) x 2 MDI/MDI-X connection
Serial Ports	RS-232/422/485 ports x 2 (software-selectable, DB9 male connector)
USB 2.0	USB 2.0 hosts x 1, type-A connectors
Cellular Antenna Connector	SMA x 2
Number of SIMs	2
SIM Format	Nano
GPS Antenna Connector	SMA x 1

Ethernet Interface

10/100BaseT(X) Ports (RJ45 connector)	2, Auto MDI/MDI-X connection
Magnetic Isolation Protection	1.5 kV (built-in)

Ethernet Software Features

Industrial Protocols	Modbus TCP Client (Master) / Server (Slave) Generic MQTT Azure IoT Device AWS IoT Core FTP/SFTP
Configuration Options	Web Console (HTTP/HTTPS) AIG QuickON
Time Management	NTP Client GPS

Serial Interface

No. of Ports	2
Connector	DB9 male
Serial Standards	RS-232/422/485
Baudrate	300 bps to 921.6 kbps
Data Bits	5, 6, 7, 8
Stop Bits	1, 2
Parity	None, Even, Odd, Space, Mark
Flow Control	RTS/CTS, XON/XOFF

Serial Signals

RS-232	TxD, RxD, RTS, CTS, DTR, DSR, DCD, GND
RS-422	Tx+, Tx-, Rx+, Rx-, GND
RS-485-2w	Data+, Data-, GND

Serial Software Features

Industrial Protocols	Modbus RTU/ASCII Master

Cellular Interface

Cellular Standards	LTE Cat. 1
Band Options (US)	LTE Bands: Band 2 (1900 MHz) / Band 4 (1700 MHz) / Band 5 (850 MHz) / Band 12 (700 MHz) / Band 13 (700 MHz) / Band 14 (700 MHz) / Band 66 (1700 MHz) / Band 71 (600 MHz) UMTS Bands: 2 (1900 MHz) / Band 4 (1700 MHz) / Band 5 (850 MHz) Carrier Approval: Verizon, AT&T
Band Options (EU)	LTE Bands: Band 1 (2100 MHz) / Band 3 (1800 MHz) / Band 7 (2600 MHz) / Band 8 (900 MHz) / Band 20 (800 MHz) / Band 28 (700 MHz) UMTS Bands: Band 1 (2100 MHz) / Band 3 (1800 MHz) Band 8 (900 MHz)
Band Option (APAC)	LTE Bands: Band 1 (2100 MHz) / Band 3 (1800 MHz) / Band 5 (850 MHz) / Band 8 (900 MHz) / Band 28 (700 MHz) UMTS Bands: Band 1 (2100 MHz) / Band 5 (850 MHz) / Band 8 (900 MHz)

Generic MQTT Client

Versions Supported	v3.1.1 v3.1
QoS Levels	0, 1, 2
Authentication Methods	Username and password
Secure Transmission	TLS 1.0 TLS 1.1 TLS 1.2
Native Capabilities	Keep Alive Retain Message Clean Session Will and Testament
Moxa Functions	Store and Forward Custom Payload Remote API Invocation

Azure IoT Device

Connection Protocols Supported	MQTT MQTT over WebSockets AMQP AMQP over WebSockets
Authentication Methods	Symmetric Key X.509 Certificate
Azure Direct Methods	Reboot Software Upgrade Remote API Invocation
Moxa Functions	Store and Forward Custom Payload

AWS IoT Core

QoS Levels	0,1
Authentication Methods	X.509 Certificate Private Key Trusted Root CA
Native Capabilities	Keep Alive
Moxa Functions	Store and Forward Custom Payload
Commands Invokable Via Jobs	Reboot Software Upgrade Remote API Invocation

Modbus RTU/ASCII

Mode	Client (Master)
Functions Supported	1, 2, 3, 4, 5, 6, 15, 16, 23
Max. No. of Commands	256 per port
Max. No of Connected Devices	62

Modbus TCP

Mode	Server (Slave) Client (Master)
Functions Supported	1, 2, 3, 4, 5, 6, 15, 16, 23
Max. No. of Client Connections	4
Max. No. of Server Connections	64
Max. No. of Commands	1500

Power Parameters

Input Voltage	9 to 36 VDC
Power Consumption	8 W (max.)
Power Connector	Screw-fastened Euroblock terminal

Physical Characteristics

Housing	Metal
Dimensions	128.5 x 89.1 x 41 mm (5.06 x 3.51 x 1.61 in)
Weight	AIG-101-T: 492 g (1.08 lb) AIG-101-T-AP/EU/US: 512 g (1.13 lb)
Installation	DIN-rail mounting Wall mounting (with optional kit)

Environmental Limits

Operating Temperature	-40 to 70°C (-40 to 158°F)
Storage Temperature (package included)	-40 to 85°C (-40 to 185°F)
Ambient Relative Humidity	5 to 95% (non-condensing)

Standards and Certifications

EMC	EN 55032/35
EMI	CISPR 32, FCC Part 15B Class A
EMS	IEC 61000-4-2 ESD: Contact: 4 kV; Air: 8 kV IEC 61000-4-3 RS: 80 MHz to 1 GHz: 10 V/m IEC 61000-4-4 EFT: Power: 2 kV; Signal: 1 kV IEC 61000-4-5 Surge: Power: 1 kV; Signal: 1 kV IEC 61000-4-6 CS: 10 V IEC 61000-4-8 PFMF
Safety	IEC 62368-1 UL 62368-1 EN 62368-1
Radio Frequency	FCC PTCRB RCM
Shock	IEC 60068-2-27
Vibration	IEC 60068-2-64 5 Grms @ 5 to 500 Hz, random wave, 1 hr per axis (without USB devices attached)
Cellular Standards	EN 301 908-1 (WCDMA/LTE) EN 301 908-2/-13 (WCDMA/LTE) EN 301 489-1/-19 (GPS) EN 301 489-1/-52 (WCDMA/LTE)

	EN 303 413 (GPS) EN 62311
Carrier Approvals	Verizon AT&T
Green Product	RoHS, CRoHS, WEEE

MTBF

Time	566,458 hrs
Standards	Telcordia Standard SR-332

Warranty

Warranty Period	5 years
Details	See www.moxa.com/warranty

Package Contents

Device	1 x AIG-101 Series gateway
Cable	1 x terminal block to power jack converter
Installation Kit	1 x DIN-rail kit
Documentation	1 x quick installation guide 1 x warranty card

Dimensions

Unit: mm (inch)

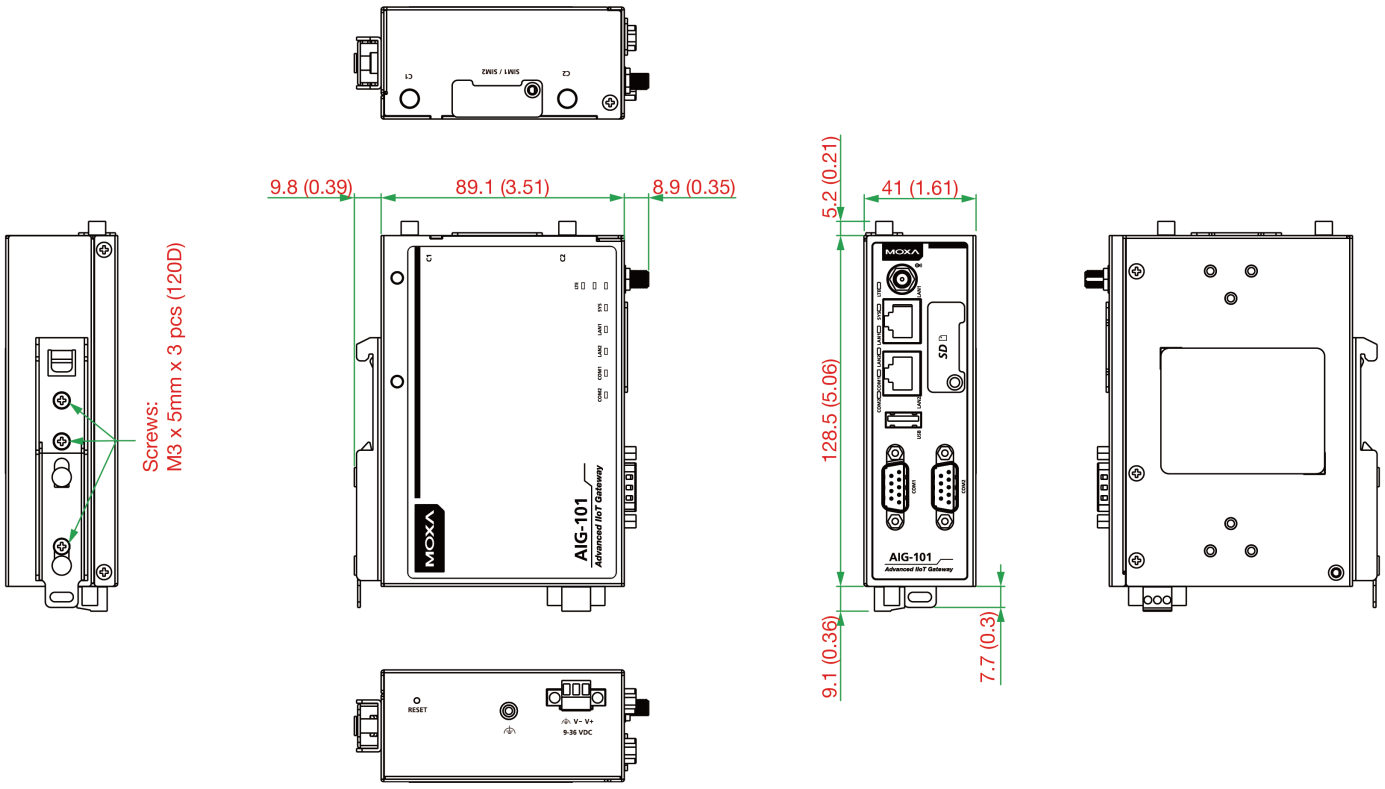

Ordering Information

Model Name	LTE	Band
AIG-101-T	–	–
AIG-101-T-AP	Cat. 1	AP
AIG-101-T-EU	Cat. 1	EU
AIG-101-T-US	Cat. 1	US

Accessories (sold separately)

Power Adapters

PWR-12150-AU-SA-T	Locking barrel plug, 12 VDC, 1.5 A, 100 to 240 VAC, AU plug, -40 to 75°C operating temperature
PWR-12150-CN-SA-T	Locking barrel plug, 12 VDC, 1.5 A, 100 to 240 VAC, CN plug, -40 to 75°C operating temperature
PWR-12150-EU-SA-T	Locking barrel plug, 12 VDC, 1.5 A, 100 to 240 VAC, EU plug, -40 to 75°C operating temperature
PWR-12150-UK-SA-T	Locking barrel plug, 12 VDC, 1.5 A, 100 to 240 VAC, UK plug, -40 to 75°C operating temperature
PWR-12150-USJP-SA-T	Locking barrel plug, 12 VDC 1.5 A, 100 to 240 VAC, US/JP plug, -40 to 75°C operating temperature

Antennas

ANT-LTE-ASM-02	GPRS/EDGE/UMTS/HSPA/LTE, 2 dBi, omnidirectional rubber-duck antenna
ANT-LTEUS-ASM-01	GSM/GPRS/EDGE/UMTS/HSPA/LTE, 1 dBi, omnidirectional rubber-duck antenna

© Moxa Inc. All rights reserved. Updated Dec 20, 2024.

This document and any portion thereof may not be reproduced or used in any manner whatsoever without the express written permission of Moxa Inc. Product specifications subject to change without notice. Visit our website for the most up-to-date product information.