AIG-301 Series

2-port Modbus to Azure advanced IIoT gateways with Arm® Cortex™-A7 dual-core 1 GHz processor, Azure IoT Edge



Features and Benefits

- Supports generic MQTT client
- Supports MQTT connection with built-in device SDKs for Azure/AWS cloud
- Supports Modbus RTU/ASCII/TCP master/client
- Supports Modbus TCP server
- Supports Azure IoT Edge
- Supports data buffering using store and forward and datalogger
- Supports easy device-provisioning with the ThingsPro Proxy utility
- Provides robust OTA function to prevent system failure during software upgrades
- Equipped with Secure Boot to prevent malicious software-injection attacks
- -40 to 70°C operating temperature range
- LTE Cat. 4 US, EU, and APAC models available

Certifications

Introduction

The AIG-301 Series advanced IIoT gateways are designed for Industrial IoT applications, especially for distributed and unmanned sites in harsh operating environments. The gateways implement Modbus RTU/TCP master/client protocols which can help you to effortlessly collect data from Modbus devices. Moreover, Azure IoT Edge software is preloaded and seamlessly integrated with the AIG-301 to enable easy, reliable, yet secure sensor-to-cloud connectivity for data acquisition and device management using the Azure Cloud solution. With the use of the ThingsPro Proxy utility, the device provisioning process is easier than ever. Thanks to the robust OTA function, you never have to worry about system failure during software upgrades. With the Secure Boot function enabled, you can prevent malicious software injection attacks, especially during the boot-up process.

Appearance

AIG-301-T-AZU-LX

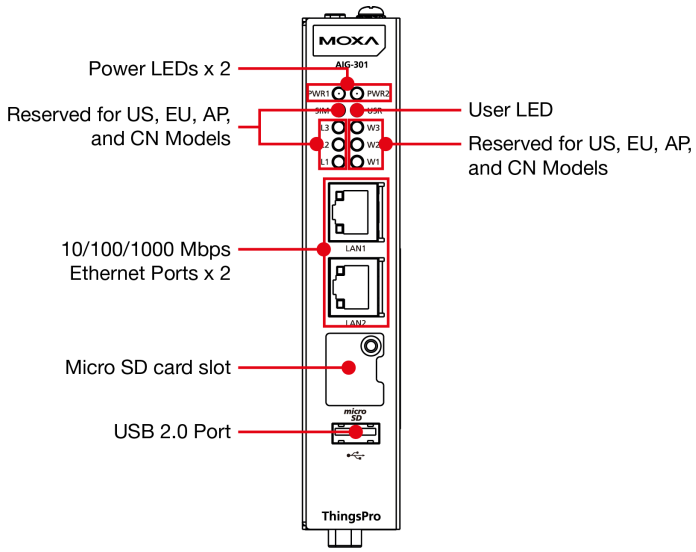

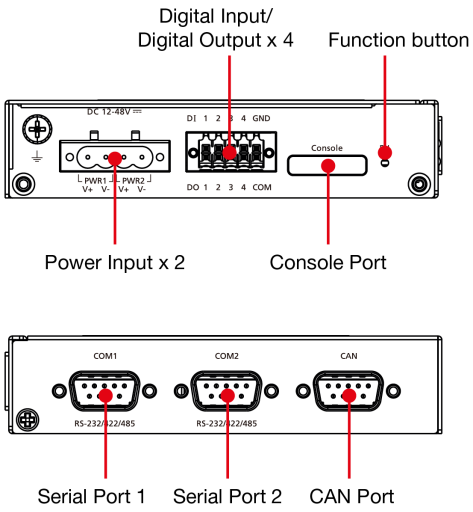

AIG-301 US, EU, AP, and CN Models

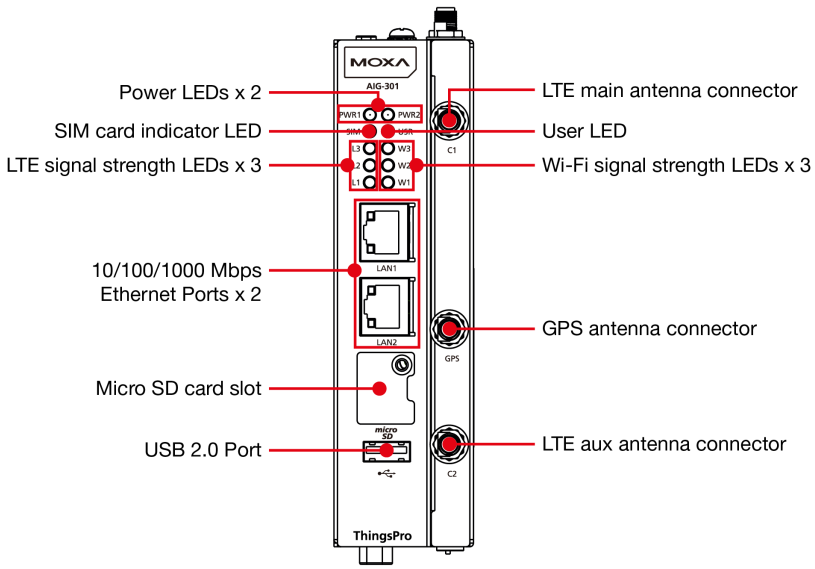

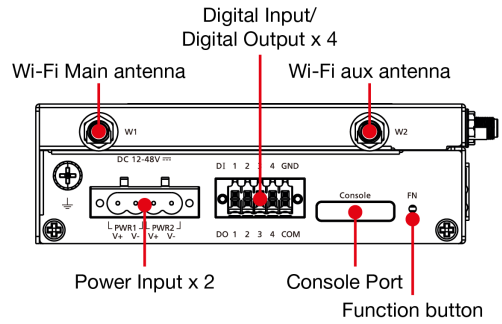

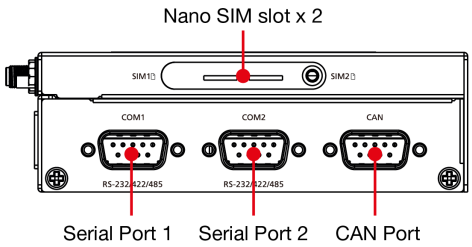

Specifications

Computer

CPU	Armv7 Cortex-A7 dual-core 1 GHz
DRAM	2 GB DDR3L
Storage Pre-installed	16 GB eMMC
Pre-installed OS	Moxa Industrial Linux (Debian 9, Kernel 4.4)
No. of Tags Supported	2048

Computer Interface

Ethernet Ports	Auto-sensing 10/100/1000 Mbps ports (RJ45 connector) x 2
Serial Ports	RS-232/422/485 ports x 2 (software-selectable, DB9 male connector)
CAN Ports	CAN 2.0 A/B x 1 (DB9 male)

Digital Input	DIs x 4
Digital Output	DOs x 4
USB 2.0	USB 2.0 hosts x 1, type-A connectors
Wi-Fi Antenna Connector	RP-SMA x 2 (excluding AIG-301-AZU-LX/T-AZU-LX models)
Cellular Antenna Connector	SMA x 2 (excluding AIG-301-AZU-LX/T-AZU-LX models)
GPS Antenna Connector	SMA x 1 (excluding AIG-301-AZU-LX/T-AZU-LX models)
Expansion Slots	AIG-301-CN-AZU-LX/T-CN-AZU-LX: mPCIe slot x 2 All other models: mPCIe slot x 1
SIM Format	Nano (excluding AIG-301-AZU-LX/T-AZU-LX models)
Number of SIMs	2
Buttons	Reset button Reset to factory default
TPM	TPM v2.0

Ethernet Interface

10/100/1000BaseT(X) Ports (RJ45 connector)	2
Magnetic Isolation Protection	1.5 kV (built-in)

Ethernet Software Features

Industrial Protocols	Modbus TCP Client (Master) / Server (Slave) Generic MQTT Azure IoT Device AWS IoT Core Azure IoT Edge Sparkplug B Client OPC UA Server FTP/SFTP
Configuration Options	Web Console (HTTP/HTTPS) ThingsPro Proxy Utility
Time Management	NTP Server/Client GPS

Serial Interface

No. of Ports	2
Connector	DB9 male
Baudrate	300 bps to 921.6 kbps
Data Bits	7, 8
Stop Bits	1, 2
Parity	None, Even, Odd, Space, Mark
Flow Control	RTS/CTS, XON/XOFF
Console Port	1 x 4-pin header

Serial Signals

RS-232	TxD, RxD, RTS, CTS, DTR, DSR, DCD, GND
RS-422	Tx+, Tx-, Rx+, Rx-, GND
RS-485-2w	Data+, Data-, GND

Serial Software Features

Industrial Protocols	Modbus RTU/ASCII Master

CAN Interface

No. of Ports	1
Connector	DB9 male
Baudrate	10 to 1000 kbps
Industrial Protocols	CAN 2.0A CAN 2.0B
Signals	CAN_H, CAN_L, CAN_GND, CAN_SHLD, CAN_V+, GND
Isolation	2 kV (built-in)

Digital Inputs

Connector	Spring-type Euroblock terminal
Sensor Type	Wet contact (NPN) Dry contact
Dry Contact	Off: open On: short to GND
Wet Contact (DI to COM)	On: 10 to 30 VDC Off: 0 to 3 VDC
Isolation	3K VDC

Digital Outputs

Connector	Spring-type Euroblock terminal
Current Rating	200 mA per channel
I/O Type	Sink
Voltage	24 VDC nominal, open collector to 30 VDC

Cellular Interface

Cellular Standards	LTE Cat. 4
Band Options (US)	LTE Band 2 (1900 MHz) / LTE Band 4 (1700 MHz) / LTE Band 5 (850 MHz) / LTE Band 12 (700 MHz) / LTE Band 13 (700 MHz) / LTE Band 14 (700 MHz) / LTE Band 66 (1700 MHz) / LTE Band 71 (600 MHz) UMTS/HSPA 850 MHz / 1900 MHz Carrier Approval: Verizon, AT&T
Band Options (EU)	LTE Band 1 (2100 MHz) / LTE Band 3 (1800 MHz) / LTE Band 7 (2600 MHz) / LTE Band 8 (900 MHz) / LTE Band 20 (800 MHz) UMTS/HSPA 900 MHz / 1800 MHz / 2100 MHz
Band Option (APAC)	LTE Band 1 (2100 MHz) / LTE Band 3 (1800 MHz) / LTE Band 5 (850 MHz) / LTE Band 8 (900 MHz) / LTE Band 28 (700 MHz) UMTS/HSPA 850 MHz / 900 MHz / 2100 MHz

GPS Interface

Receiver Types	GPS/GLONASS/BeiDou/Galileo/QZSS
Accuracy	Position: 2.0 m @CEP50
Time to First Fix (TTFF)	Hot start: 1.1 s Warm start: 22.1 s Cold start: 29.9 s
Sensitivity	Acquisition: -147 dBm Cold starts: -145 dBm Tracking: -160 dBm
Update Rate	1 Hz

Azure IoT Edge

Versions Supported	v1.4.33
Authentication Methods	Manual / Connection String DPS / Symmetric Encryption DPS / X.509 Certificate DPS / TPM
Azure Direct Methods	Reboot Software Upgrade Remote API Invocation
Azure Module Twin	Device Configuration
Moxa Functions	Custom Payload Message Group

Sparkplug B Client

Versions Supported	v2.2
Node Commands (NCMD)	Next Broker Reboot Rebirth
Moxa Functions	Store and Forward Custom Payload

OPC UA Server

No. of Client Connections	4
Security	Sign and encrypt with policies Basic128Rsa15, Basic256, and Basic256Sha256
User Authentication and Authorization	Username/password
Supported Profiles	OPC UA v1.02
No. of Supported Tags	1000

Generic MQTT Client

Versions Supported	v3.1.1 v3.1
QoS Levels	0, 1, 2
Authentication Methods	Username and password
Secure Transmission	TLS 1.0 TLS 1.1 TLS 1.2

Native Capabilities	Keep Alive Retain Message Clean Session Will and Testament
Moxa Functions	Store and Forward Custom Payload Remote API Invocation

Azure IoT Device

Connection Protocols Supported	MQTT MQTT over WebSockets AMQP AMQP over WebSockets
Authentication Methods	Symmetric Key X.509 Certificate
Azure Direct Methods	Reboot Software Upgrade Remote API Invocation

AWS IoT Core

QoS Levels	0,1
Authentication Methods	X.509 Certificate Private Key Trusted Root CA
Native Capabilities	Keep Alive
Moxa Functions	Store and Forward Custom Payload
Commands Invokable Via Jobs	Reboot Software Upgrade Remote API Invocation

Modbus RTU/ASCII

Mode	Client (Master)
Functions Supported	1, 2, 3, 4, 5, 6, 15, 16, 23
Max. No. of Commands	256 per port
Max. No of Connected Devices	62

Modbus TCP

Mode	Client (Master), Server (Slave)
Functions Supported	1, 2, 3, 4, 5, 6, 15, 16, 23
Max. No. of Server Connections	64
Max. No. of Client Connections	4
Max. No. of Commands	2048

LED Indicators

System	Power x 2 User x 1 SIM card indicator x 1
LAN	2 per port (10/100/1000 Mbps)
Wireless Signal Strength	Cellular/Wi-Fi x 6

Power Parameters

No. of Power Inputs	Redundant dual inputs
Input Voltage	12 to 48 VDC
Input Current	AIG-301-AZU-LX/T-AZU-LX: 0.4 A @ 12 VDC AIG-301-CN-AZU-LX/T-CN-AZU-LX: 0.5 A @ 12 VDC All other models: 0.7 A @ 12 VDC
Power Consumption	AIG-301-AZU-LX/T-AZU-LX: 4.8 W AIG-301-CN-AZU-LX/T-CN-AZU-LX: 6.0 W All other models: 8.4 W
Power Connector	4-pin terminal block

Reliability

Automatic Reboot Trigger	External W ndog timer)

Physical Characteristics

Housing	Metal SECC
IP Rating	IP30
Installation	DIN-rail mounting Wall mounting (with optional kit)
Dimensions	AIG-301-AZU-LX/T-AZU-LX: 141.5 x 120 x 27 mm (5.7 x 4.72 x 1.06 in) All other models: 141.5 x 120 x 39 mm (5.7 x 4.72 x 1.54 in)
Weight	AIG-301-AZU-LX/T-AZU-LX: 560 g (1.23 lb) AIG-301-CN-AZU-LX/T-CN-AZU-LX: 745 g (1.64 lb) All other models: 750 g (1.65 lb)

Environmental Limits

Operating Temperature	Standard temp. models: AIG-301-US-AZU-LX, AIG-301-EU-AZU-LX, AIG-301-APAZULX, AIG-301-CN-AZU-LX: -20 to 70°C (-4 to 158°F) AIG-301-AZU-LX: -20 to 85°C (-4 to 185°F) Wide Temp. Models: AIG-301-T-US-AZU-LX, AIG-301-T-EU-AZU-LX, AIG- 301-TAPAZU-LX, AIG-301-T-CN-AZU-LX: -40 to 70°C (-40 to 158°F)) AIG-301-T-AZU-LX: –40 to 85°C (-40 to 185°F)
Storage Temperature (package included)	-40 to 85°C (-40 to 185°F)
Ambient Relative Humidity	5 to 95% (non-condensing)
Shock	IEC 60068-2-27
Vibration	2 Grms @ IEC 60068-2-64, random wave, 5 to 500 Hz, 1 hr per axis (without USB devices attached)

Standards and Certifications

EMC	EN 55032/35 EN 61000-6-2/-6-4
EMI	CISPR 32, FCC Part 15B Class A
EMS	IEC 61000-4-2 ESD: Contact: 4 kV; Air: 8 kV IEC 61000-4-3 RS: 80 MHz to 1 GHz: 10 V/m IEC 61000-4-4 EFT: Power: 2 kV; Signal: 1 kV IEC 61000-4-5 Surge: Power: 1 kV; Signal: 1 kV IEC 61000-4-6 CS: 10 V IEC 61000-4-8 PFMF
Safety	UL 62368-1 EN 62368-1
Radio	TELEC NCC KC RCM
Carrier Approvals	AT&T Verizon PTCRB
RED	EN 301 489-1/17/19/52 EN 301 908-1 EN 303 413 EN 62311
Hazardous Locations	Class I Division 2, ATEX
Green Product	RoHS, CRoHS, WEEE

MTBF

Time	AIG-301-AZU-LX/T-AZU-LX: 794,092 hrs AIG-301-US-AZU-LX/T-US-AZU-LX, AIG-301-EU-AZU-LX/T-EU-AZU-LX, AIG-301-AP-AZU-LX/T-AP-AZU-LX: 683,818 hrs
Standards	Telcordia (Bellcore) Standard TR/SR

Warranty

Warranty Period	5 years
Details	See www.moxa.com/warranty

Package Contents

Device	1 x AIG-301 Series
Cable	1 x terminal block to power jack converter
Installation Kit	1 x DIN-rail kit
Documentation	1 x quick installation guide 1 x warranty card

Dimensions

AIG-301-T-AZU-LX

Unit: mm (inch)

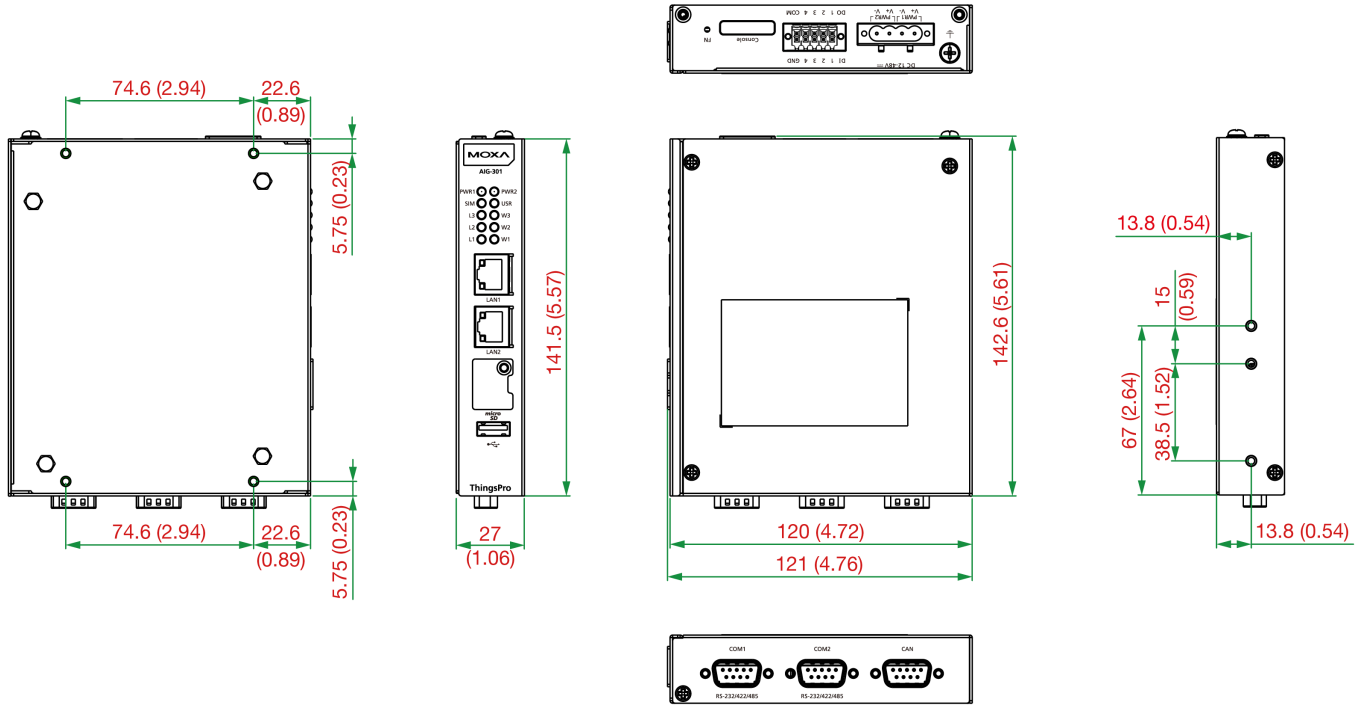

AIG-301 US, EU, AP, and CN Models

Unit: mm (inch)

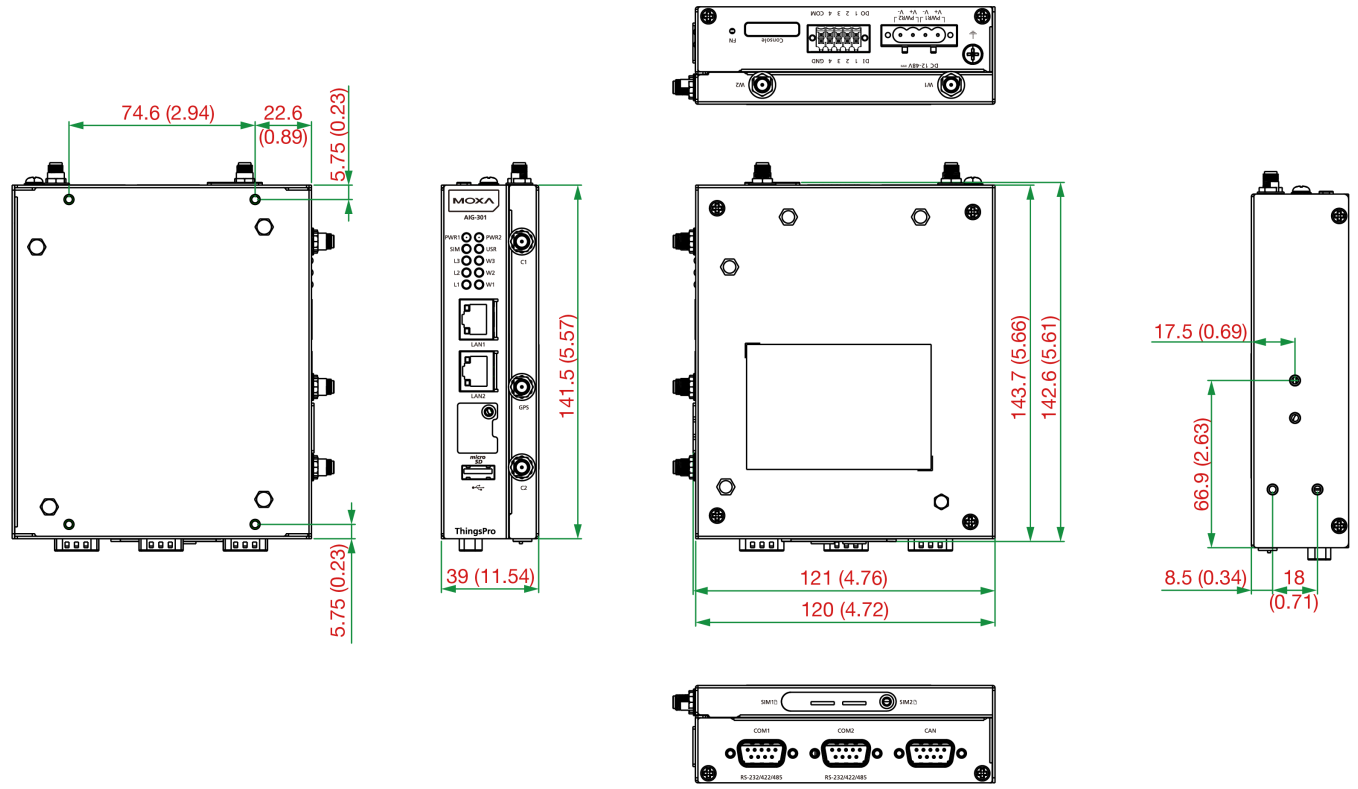

Ordering Information

Model Name	mPCIe Slot 1 for LTE Module	mPCIe Slot 2 for Wi-Fi Module	Operating Temperature
AIG-301-AZU-LX	–	–	-20 to 85°C
AIG-301-T-AZU-LX	–	–	-40 to 85°C
AIG-301-CN-AZU-LX	Reserved	Reserved	-20 to 70°C
AIG-301-T-CN-AZU-LX	Reserved	Reserved	-40 to 70°C
AIG-301-US-AZU-LX	US region LTE module preinstalled	Reserved	-20 to 70°C
AIG-301-T-US-AZU-LX	US region LTE module preinstalled	Reserved	-40 to 70°C
AIG-301-EU-AZU-LX	Europe region LTE module preinstalled	Reserved	-20 to 70°C
AIG-301-T-EU-AZU-LX	Europe region LTE module preinstalled	Reserved	-40 to 70°C
AIG-301-AP-AZU-LX	APAC region LTE module preinstalled	Reserved	-20 to 70°C
AIG-301-T-AP-AZU-LX	APAC region LTE module preinstalled	Reserved	-40 to 70°C

Accessories (sold separately)

Power Wiring

CBL-PJTB-10	Non-locking barrel plug to bare-wire cable
Mini DB9F-to-TB	DB9 female to terminal block connector

Cables

CBL-F9DPF1x4-BK-100	Console cable with 4-pin connector, 1 m

Wi-Fi Wireless Modules

UC-8200-WLAN22-AC	Wireless package for UC-8200 V2.0 or later with Wi-Fi module, 2 screws, 2 spacers, 1 heat sink, 1 pad

Antennas

ANT-LTEUS-ASM-01	GSM/GPRS/EDGE/UMTS/HSPA/LTE, 1 dBi, omnidirectional rubber-duck antenna
ANT-LTE-ASM-04 BK	704 to 960/1710 to 2620 MHz, LTE omnidirectional stick antenna, 4.5 dBi
ANT-LTE-OSM-03-3m BK	700-2700 MHz, multiband antenna, specifically designed for 2G, 3G, and 4G applications, 3 m cable
ANT-LTE-ASM-05 BK	704-960/1710-2620 MHz, LTE stick antenna, 5 dBi
ANT-LTE-OSM-06-3m BK MIMO	Multiband antenna with screw-fastened mounting option for 700-2700/2400-2500/5150-5850 MHz frequencies
ANT-WDB-ARM-0202	2 dBi at 2.4 GHz or 2 dBi at 5 GHz, RP-SMA (male), dual-band, omnidirectional antenna
ANT-GPS-CSM-04-3m BK	20 dBi at 1575 to 1605 MHz, SMA (male), right-hand circular polarization (RHCP), active GPS antenna, 3-meter cable

DIN-Rail Mounting Kits

UC-8210 DIN-rail Mounting Kit	DIN-rail mounting kit for UC-8210 with 4 M3 screws
UC-8220 DIN-rail Mounting Kit	DIN-rail mounting kit for UC-8220 with 4 M3 screws

Wall-Mounting Kits

UC-8200 Wall-mounting Kit	Wall-mounting kit for UC-8200 with 4 M3 screws

© Moxa Inc. All rights reserved. Updated Nov 21, 2024.

This document and any portion thereof may not be reproduced or used in any manner whatsoever without the express written permission of Moxa Inc. Product specifications subject to change without notice. Visit our website for the most up-to-date product information.