CATALOG NO	VOLTAGE	NEC MOTOR HP	NEC MOTOR CURRENT	APPROX WT-LBS	TERMINAL HOLE SIZE
KDRD34PC2V	690	40	41	18	.31

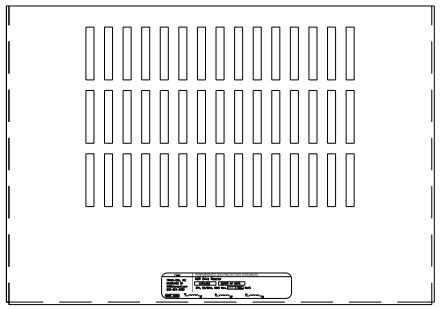

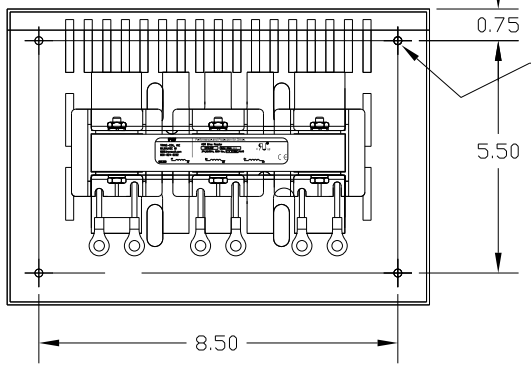

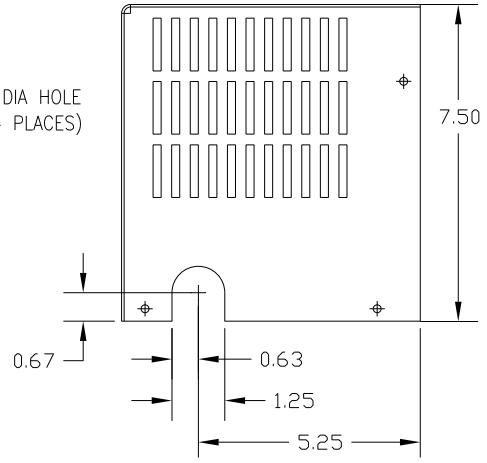

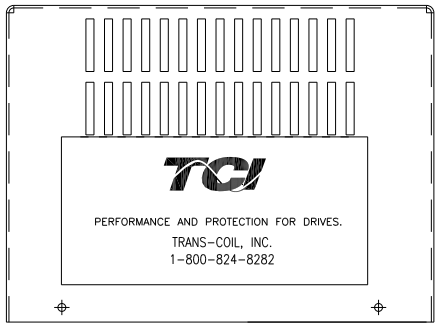

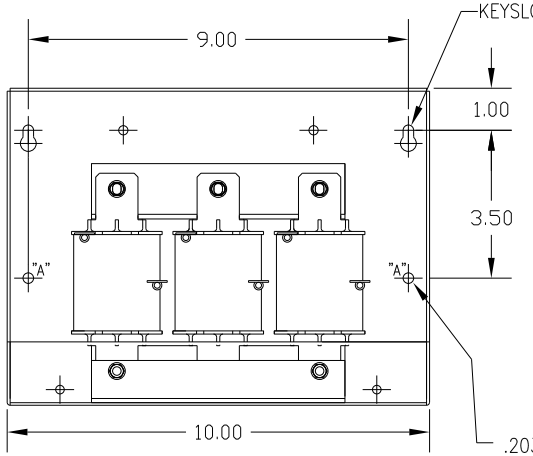

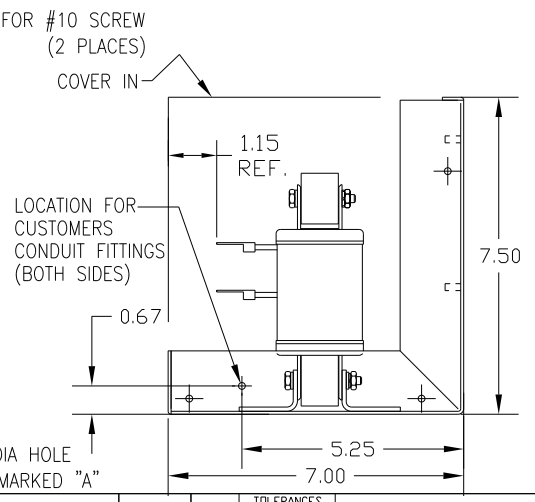

NO	REVISION	DATE	BY

TOLERANCES (EXCEPT AS NOTED)
DECIMAL
.XX ±.03
.XXX±.01
FRACTIONAL
± 1/32
ANGULAR
± 1/2°

CUSTOMER IS RESPONSIBLE FOR INSTALLATION
TO MEET ALL NATIONAL AND LOCAL ELECTRICAL CODES.