VOLTAGE 690V	NEC MOTOR HP	CATALOG NO	MOTOR HP AMPS	AMPS MAX	APPROX WT-LBS	TERMINAL HOLE SIZE
OUTPUT	40	KDRD34PV	41	45	12	.313

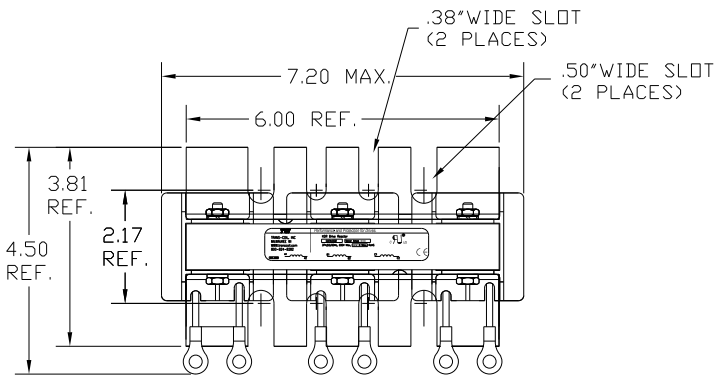

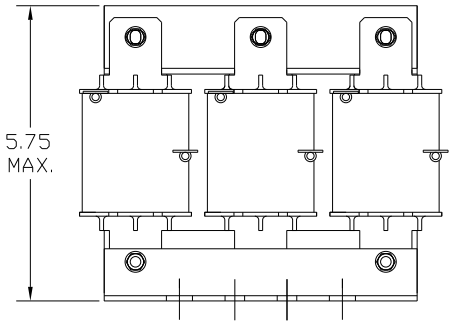

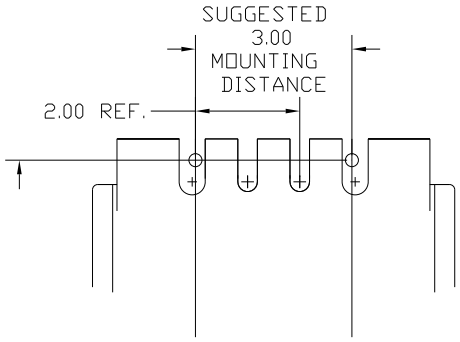

NO	REVISION	DATE	BY

TOLERANCES
(EXCEPT AS NOTED)
DECIMAL
.XX ±.03
.XXX±.01
FRACTIONAL
± 1/32
ANGULAR
± 1/2°