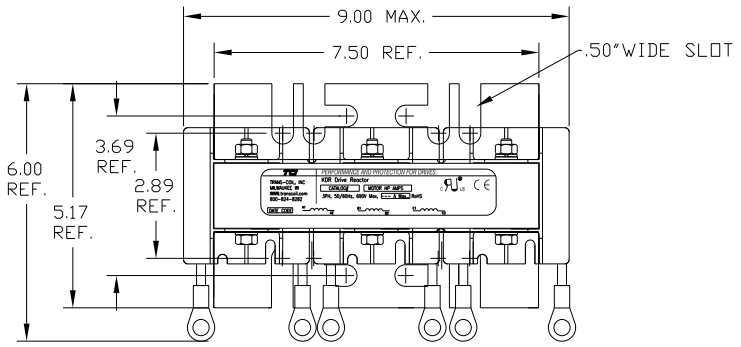

VOLTAGE 690V	NEC MOTOR HP	CATALOG NO	MOTOR HP AMPS	AMPS MAX	APPROX WT-LBS	TERMINAL HOLE SIZE.
OUTPUT	75	KDRF32PV	77	80	25	.375

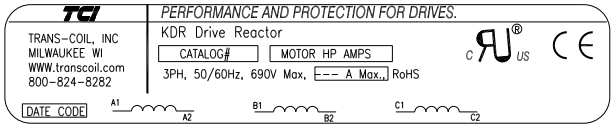

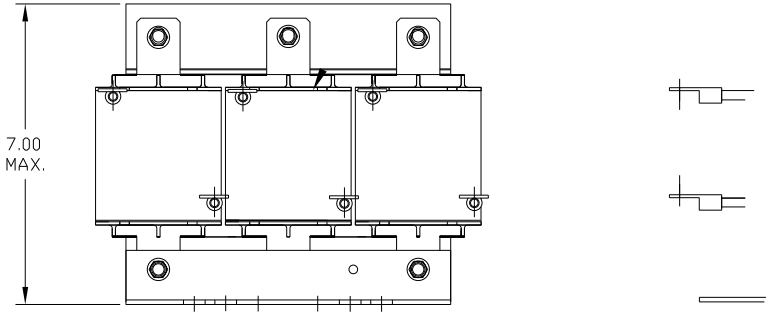

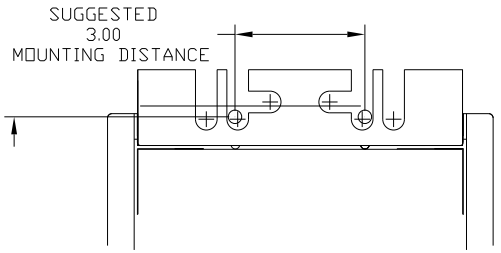

NO	REVISION	DATE	BY

TOLERANCES (EXCEPT AS NOTED)
DECIMAL
.XX ±.03
.XXX±.01
FRACTIONAL
± 1/32
ANGULAR
± 1/2°