480 Rated Voltage, 600 Max Voltage, Output								
Part Number	Horsepower (HP)	Motor Amps (A)	Maximum Amps (A)	Inductance (uH)	Losses (W)	Weight (LBS)	Available Lug Kit	Terminal Hole Diameter (Inches)
KDRH1P	100	124	130	80.2	115	30	SLK10	0.28

575 Rated Voltage, 600 Max Voltage, Output								
Part Number	Horsepower (HP)	Motor Amps (A)	Maximum Amps (A)	Inductance (uH)	Losses (W)	Weight (LBS)	Available Lug Kit	Terminal Hole Diameter (Inches)
KDRH31P	125	125	130	146	115	30	SLK10	0.28

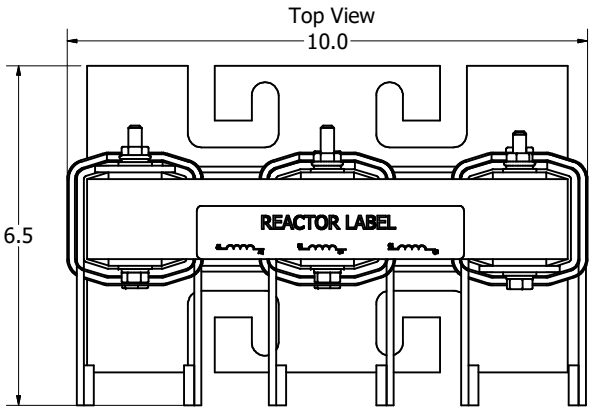

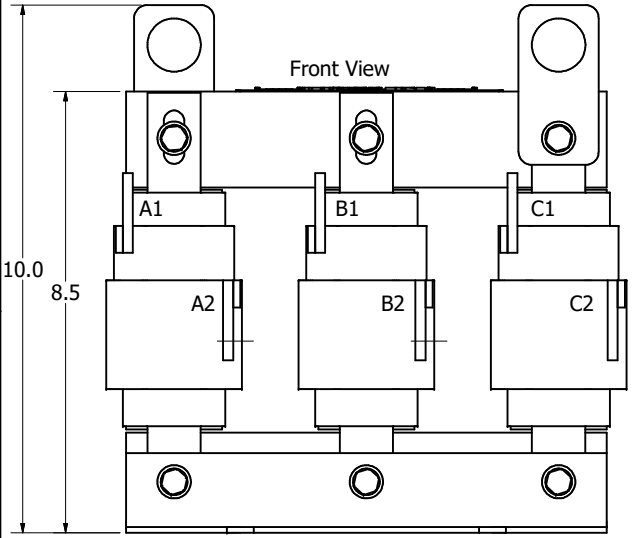

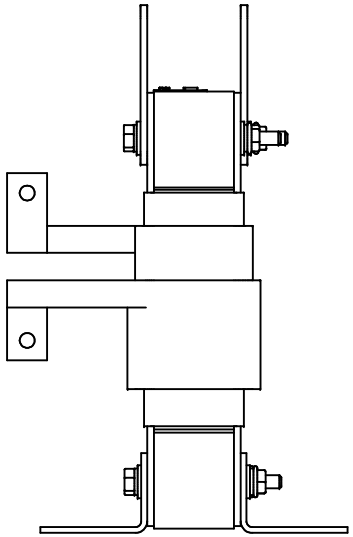

(Customer Connections)
Markings On Coils
For Reference Only.

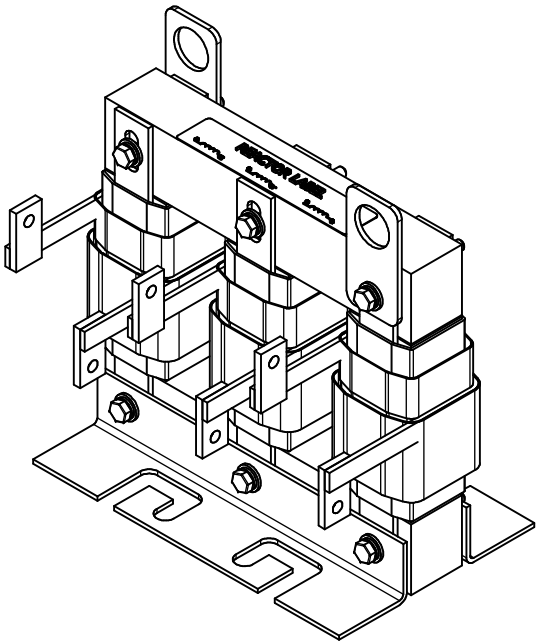

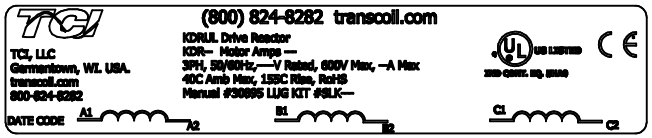

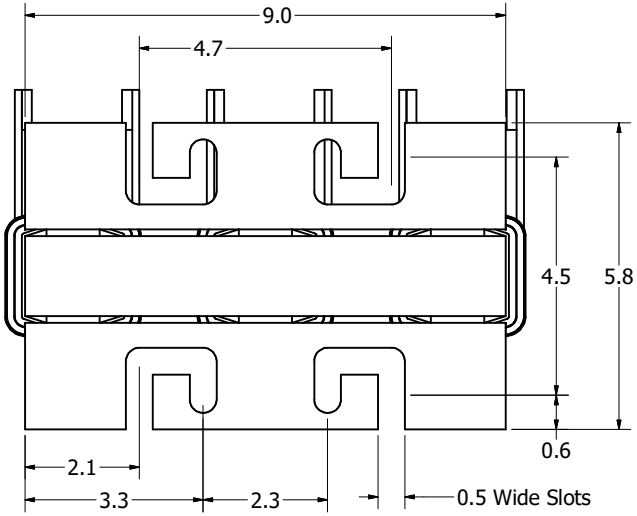

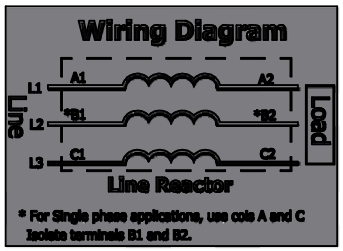

Notes:

1. KDR Lug Kits sold separately. Contact TCI.
2. UL file number: cULus Listed File E116124.
3. KDR Drive Reactors Comply With The Thermal and Altitude Standards Set Forth by NEMA ST20-1992.
4. KDR IOM Manual Part Number 30895
5. Material(s) Shall be RoHS Compliant
6. Customer Is Responsible For Installation To Meet All National And Local Electrical Codes.

THE INFORMATION AND DESIGNS CONTAINED IN THIS DRAWING ARE CONFIDENTIAL AND THE PROPRIETARY PROPERTY OF ALLIED MOTION TECHNOLOGIES INC. AND ITS SUBSIDIARIES. NEITHER THIS DESIGN NOR ANY INFORMATION CONTAINED IN THIS DRAWING MAY BE REPRODUCED OR DISCLOSED TO OTHERS WITHOUT THE EXPRESS WRITTEN CONSENT OF ALLIED MOTION TECHNOLOGIES INC. AND ITS SUBSIDIARIES.

NO	REVISION	DATE	BY
C	6535, Terminal To 32766	1/31/2024	DSW
B	6394, Termination update	1/16/2024	DSW
A	6394 was busbar	8/28/2023	DSW

TOLERANCES (EXCEPT AS NOTED)
DECIMAL
.XX ± .25
.XXX ± .10
FRACTIONAL
± 1/32
ANGULAR
± 1°